C956i, C966i Treadmill

Warning: This service manual is for use by Precor trained service providers only.
If you are not a Precor Trained Servicer, you must not attempt to service any Precor Product;
Call your dealer for service.

This document contains information required to perform the majority of troubleshooting, and replacement procedures required to repair and maintain this product.

This document contains general product information, software diagnostic procedures (when available), preventative maintenance procedures, inspection and adjustment procedures, troubleshooting procedures, replacement procedures and electrical block and wiring diagrams.

To move directly to a procedure, click the appropriate procedure in the bookmark section to the left of this page. You may “drag” the separator bar between this page and the bookmark section to change the size of the page being viewed.

© 2006 Precor Incorporated
Unauthorized Reproduction and Distribution Prohibited By Law

Section One - Things you Should Know

About This Appendix

The C956i, C966i (Gen 06) incorporate new drive motor system and display systems. The drive motor is a three phase AC motor. The drive motor controller converts a single phase AC input into three phase motor control.

Section One, Things You Should Know. This section includes technical specifications. Read this section, as well as the C956i, C966i Treadmill Owners Manual, before you perform the maintenance procedures in this manual.

Section Two, Software Features. Precor's C956i, C966i Treadmills are programmed with several diagnostic and setup features. This section contains the procedures you need to access the diagnostic features on this treadmill.

Section Three, Checking Treadmill Operation. This section provides you with a quick way of checking treadmill operation. Check treadmill operation at the end of a maintenance procedure and when it is necessary to ensure that the treadmill is operating properly.

Section Four, Inspection and Adjustment Procedures. Perform inspection procedures when a trouble symptom points to a particular problem and after removing and replacing major components. Many maintenance problems can be fixed by adjusting various treadmill components. This section also provides you with the step-by-step procedures required to make these adjustments.

Section Five, Troubleshooting Procedures. The diagnostic and troubleshooting procedures contained in this section should be performed when it is necessary to isolate a problem to a particular component.

Section Six, Replacement Procedures. When a treadmill component must be replaced, go to this section and follow the step-by-step procedures required to remove and replace the component.

Section Seven, Technical Diagrams and Parts Lists. This section includes wiring diagrams, and block diagrams for the C956i, C966i Treadmills.

Safety guidelines you should know and follow include:

- Read the owner’s manual and follow all operating instructions.
- Operate the treadmill on a solid, level surface.Visually check the treadmill before beginning service or maintenance operations. If it is not completely assembled or is damaged in any way, exercise extreme caution while operating and checking the treadmill.
- When operating the treadmill, do not wear loose clothing. Do not wear shoes with heels or leather soles. Check the soles of your shoes and remove any embedded stones. Tie long hair back.
- Do not rock the unit. Do not stand or climb on the handlebars, display enclosure, or cover.
- Do not set anything on the handlebars, display enclosure, or cover. Never place liquids on any part of the treadmill, while performing service.
- To prevent electrical shock, keep all electrical components away from water and other liquids.
- Do not use accessory attachments that are not recommended by the manufacturer-such attachments might cause injuries.
-
- Removing the hood exposes high voltage components and potentially dangerous machinery. Exercise extreme caution when you perform maintenance procedures with the hood removed.

General Information

For the latest exploded view diagram, part number and part pricing information, visit the Precor dealer website at “www.precor.com/connection.

Procedure 2.1 - Accessing the Diagnostic Software

The treadmill's diagnostic software consists of the following modes:

- Display Test
- Keyboard Test
- Heart Rate Test
- Machine Test
  - Belt Speed
  - Incline

Procedure

1. Plug the power cord into the wall outlet, then turn on the treadmill with the circuit breaker.

2. Using the **RESET** key and the numeric keypad, press keys **RESET,5,1,7,6,5,7,6,1**, sequentially.

3. **Hardware Validation** will scroll across the display followed by **DISPLAY TEST**.

Diagram 2.1 - C956i, C966i Treadmill Display

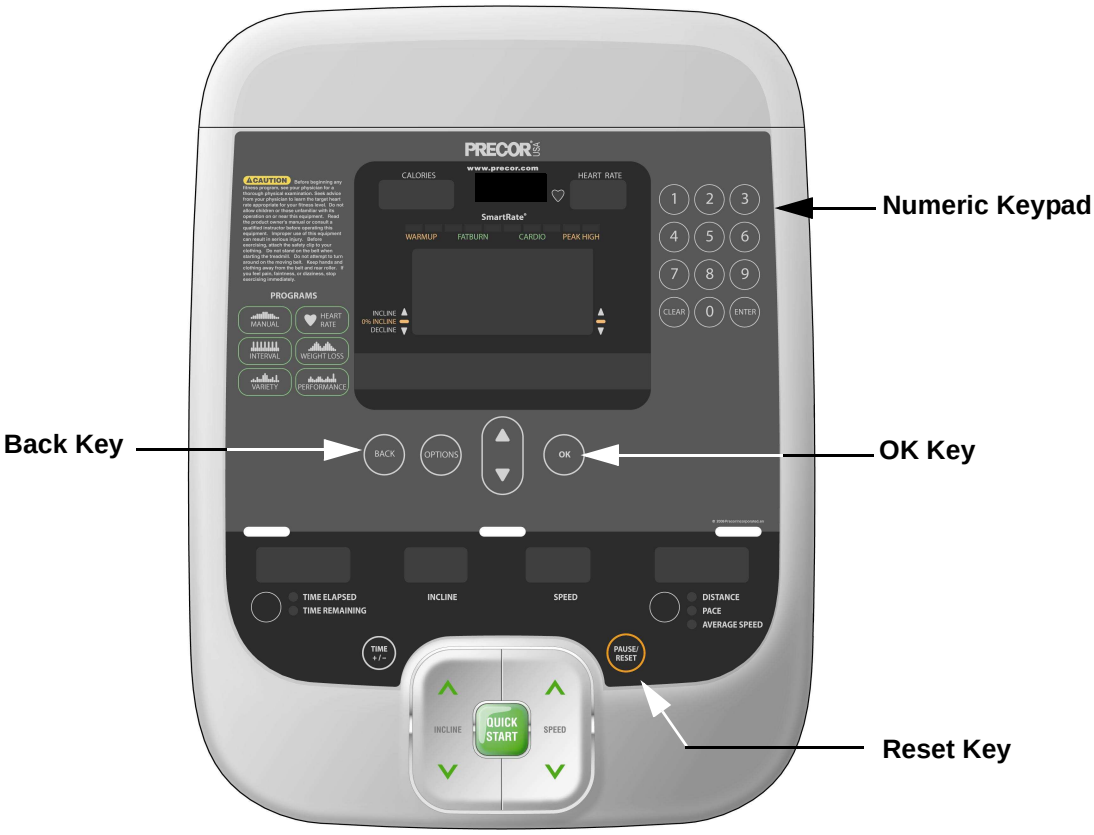

4. Press the **OK** key, the upper most group of LED's will illuminate on the display. Check the display to ensure that all LED segments are illuminated.

5. Press the **OK** key four more times to display the remaining LED groups. Check each display group to ensure that all LED segments are illuminated.

6. Press the **BACK** key then the ▼ key, **KEYBOARD TEST** will scroll across the display.

7. Press the **OK** key, a representation of all of the keys on the console will be displayed. Pressing a key on the console will cause the representation of that key to go off. Press all of the keys on the console to ensure that all of the keys are functioning.

8. Press and hold the **BACK** key then the ▼ key, **HEART RATE** will be displayed.

9. Grasp both of the heart rate grips on the handlebar, after a couple of seconds the heart rate will be displayed in the heart rate and smart rate displays.

10. Use chest strap transmitter or a test transmitter to test the wireless heart rate function, after a couple of seconds the heart rate will be displayed in the heart rate and smart rate displays.

11. Press the **BACK** key then the ▼ key, **MACHINE TEST** will scroll across the display.

12. You may now proceed to either the belt speed test or the incline test. Press the ▼ key once to access the belt speed test or twice to access the incline test.

13. **BELT SPEED** test. Press the **OK** key, the console will display the power bits (PWRB), Press the **SPEED** ▲ key to start the treadmill running belt, the display will indicate the power bits, the elapsed time and the actual speed (in either miles per hour or kilometers per hour depending on the club parameters setting, see Procedure 2.3).

14. Press the ▼ key, the console will display the motor current (AMPS), the elapsed time and the actual speed.

15. Press the **BACK** key to exit the belt speed test.

16. **INCLINE** test. The console will display the analog to digital (A/D) incline position number and the incline position in percent of incline. Press the inline ▲,▼ keys to operate the incline through out its range.

17. Press the **BACK** key to exit the incline test.

18. Press the **RESET** key to exit the hardware validation test.

Procedure 2.2 - Displaying Information

The information display will access the following data;

- Odometer
- Hour Meter
- U-Boot Software
- U-Base Software
- Lower Software
- Serial Number
- Usage log
- Error Log

Procedure

1. Plug the power cord into the wall outlet, then turn on the treadmill with the circuit breaker.

2. With the **PRECOR** banner scrolling, press the keys **RESET,6,5,** sequentially.

3. **DIAGS-INFORMATION DISPLAY** will scroll across the display.

4. Use the ▲,▼ keys to move to the desired display shown in the list above.

5. **ODOMETER** display. Press the **OK** key.

6. The odometer will be displayed as **1234567 MILES** or **1234567 KM** depending on club parameter settings (See Procedure 2.3)**.** The odometer is also used to provide the “distance stamp” for the error code log

Note: The odometer data is stored in non-volatile memory on the upper PCA. If the upper PCA is replaced the odometer data will be lost.

7. Press the **BACK** key to exit the odometer display.

8. **HOUR METER** display. Press the **OK** key.

9. The operating time of the unit will be displayed as **12345 HOURS**. The operating time is defined as total amount of time that the unit has operated in program modes with the drive motor running. The hour meter is also used to provide the “time stamp” for the error code log.

10. Press the **BACK** key to exit the hour meter display.

11. **U-BOOT SW** display. This display the installed version of upper boot software. The boot software is used to upload new software into the upper display PCA.

12. Press the **OK** key. The software part number will be displayed as **XXXXX-XXX.**

13. Press the **BACK** key to exit the U-Boot SW display.

14. **U-BASE SW** display. This display the installed version of upper PCA software.

15. Press the **OK** key. The software part number will be displayed as **XXXXX-XXX.**

16. Press the **BACK** key to exit the U-Base SW display.

17. **LOWER SW** display. This display the installed version of lower PCA software.

18. Press the **OK** key. The software part number will be displayed as **XXXXX-XXX.**

19. Press the **BACK** key to exit the lower SW display.

20. **SER. NUMBER** display. Press the **OK** key.

21. The treadmill's serial number will be displayed. The serial number may be incorrect or not displayed if the upper PCA has been replaced.

22. Press the **BACK** key to exit the serial number display.

23. **USAGE LOG** display. Press the **OK** key.

24. Use the ▲,▼ keys to move through the list of programs. A message will scroll describing the program, the number of times and the number of minutes the program was used.

25. Press the **BACK** key to exit the usage log display.

26. **ERROR LOG** display. Press the **OK** key, the quantity of errors in the log will be displayed.

27. Press the **OK** key, the most recent error will be displayed first.

28. Use the ▲,▼ keys to move through the list of errors. The error messages will list the error name, the odometer reading when the error occurred, the hour meter when the error occurred and the drive motor current reading when the error occurred.

29. If you wish to clear the error log, press and hold the **QUICK START** key. The message **HOLD TO CLEAR ERRORS** will be displayed. The error log will be cleared when the message **NO ERRORS** is displayed.

30. Press the **RESET** key to exit the information display.

31. Please note that the **ERROR LOG** may also be accessed at any time by pressing and holding the **RESET** key for four seconds. If the error log does not contain any errors, the message **STUCK KEY** will be displayed.

Procedure 2.3 - Setting Club Parameters

This procedure allows you to change the following club settings:

- Safety Code
- Select Language
- Select Units
- Set Max Workout Time
- Set Max Pause Time
- Set Cool Down Time
- Set Speed Limit
- Set Incline Limit
- Hidden Programs
- Remote Speed Control
- Set Custom Program 1
- Set Custom Program 2

Procedure

1. Plug the power cord into the wall outlet, then turn on the treadmill with the circuit breaker.

2. With the banner scrolling, press keys **RESET,5,6,5,1,5,6,5**, sequentially.

3. Use the ▲,▼ keys to move to the desired display shown in the list above.

4. **DIAGS-SET CLUB PARAMETERS** will scroll across the display.

5. **SAFETY CODE** display. The safety code, when enabled, makes the user enter a password in order to start the treadmill. Press the **OK** key.

6. Use the ▲,▼ keys to toggle between **ENABLED** and **DISABLED.**

7. Press the **BACK** key to exit the safety code display.

8. **SELECT LANGUAGE** display. Press the **OK** key.

9. Use the ▲,▼ keys to toggle between the available languages.

10. Press the **BACK** key to exit the select language display.

11. **SELECT UNITS** display. Press the **OK** key.

12. Use the ▲,▼ keys to toggle between **U.S** (miles per hour) and **METRIC** (kilometers per hour).

13. Press the **BACK** key to exit the set units display.

14. **SET MAX WORKOUT TIME** display. Press the **OK** key.
15. Use the ▲,▼ keys to select the maximum time a user can remain in a program.
16. Press the **BACK** key to exit the set max. workout time display.
17. **SET MAX PAUSE TIME** display. Press the **OK** key.
18. Use the ▲,▼ keys to select the maximum time a program will remain in the pause mode.
19. Press the **BACK** key to exit the set max. pause time display.
20. **SET COOL DOWN TIME** display. Press the **OK** key.
21. Use the ▲,▼ keys to select the cool down time.
22. Press the **BACK** key to exit the set cool down time display.
23. **SET SPEED LIMIT** display. Press the **OK** key.
24. Use the ▲,▼ keys to select the maximum allowable treadmill speed.
25. Press the **BACK** key to exit the set speed limit time display.
26. **SET INCLINE LIMIT** display. Press the **OK** key.
27. Use the ▲,▼ keys to select the maximum allowable incline setting.
28. Press the **BACK** key to exit the set incline limit time display.
29. **HIDDEN PROGRAMS** display. Press the **OK** key.
30. Use the ▲,▼ keys to toggle between **HIDE PROGRAMS** and **SHOW PROGRAMS.**
31. Press the **BACK** key to exit the hidden programs display.
32. **REMOTE SPEED CONTROL** display. Remote speed control allows the treadmill speed to be controlled by an external source such as InSite. Press the **OK** key.
33. Use the ▲,▼ keys to toggle between **ENABLED** and **DISABLED.**
34. Press the **BACK** key to exit the remote speed control display.
35. **SET CUSTOM PROGRAM 1** display. Allows programing of the custom program 1. Follow the instructions scrolling on the display to program the custom course. Use the **ENTER** key to save changes and exit or the **BACK** to exit without saving changes.

36. **SET CUSTOM PROGRAM 2** display. Allows programing of the custom program 2. Follow the instructions scrolling on the display to program the custom course. Use the **ENTER** key to save changes and exit or the **BACK** to exit without saving changes.

Procedure 2.4 - Documenting Software Problems

When a problem is found with the software in the upper or lower PCA, record the information listed below.

When a problem occurs, record the following information:

- Model and serial number
- Software version number
- Program number running when the problem occurred
- A description of:
-
    a. What happened or failed to happen.

    b. The action taken by the user just before the problem occurred.

    c. Problem-related information (such as how far into the program the problem occurred, the work level being used when the problem occurred, error code displayed, etc.).

- The frequency of occurrence.

Section Three - Checking Treadmill Operation

This section provides you with a quick method of checking treadmill operation. Check treadmill operation at the end of a maintenance procedure and when it is necessary to ensure that the treadmill is operating properly.

Procedure

1. Plug the power cord into the wall outlet, then turn on the treadmill with the circuit breaker.

2. Operate the treadmill in the Manual program. Adjust the speed of the running belt to 2–3 m.p.h. Operate the treadmill for at least 5 minutes.

    a. Concentrate on the feel of the running belt and the sound of the drive motor and rollers. Be on the alert for unusual noises, smells, or vibrations.

    b. Observe the LED's on the electronic console. Make sure that each LED lights as the information corresponding to that LED is displayed on the electronic console.

    c. Enter the diagnostics program (see Procedure 2.1) and log the power bits under loaded and unloaded conditions.

3. Press the **STOP** key. When the treadmill comes to a stop, view the electronic console as the treadmill scans time, speed, distance and percent of incline.

4. Press the **INCLINE ▲** key while viewing the electronic console. Confirm that the running bed inclines and the incline display increments to 15% as the **INCLINE ▲** key is pressed.

5. Press the **INCLINE ▼** key while viewing the electronic console. Confirm that the running bed returns to a level position and the incline display decrements to 0% as the **INCLINE ▼** key is pressed.

6. Turn off the treadmill with the circuit breaker, then unplug the treadmill from the wall outlet.

Procedure 4.1 - Calibrating the Incline Motor

1. Set the treadmill circuit breaker in the “off” position and unplug the line cord from the wall outlet.

2. Remove the hood.

3. Place the treadmill on its right side. Remove hitch and clevis pins that secure the incline tube to the incline platform. See Diagram 4.1.

Diagram 4.1 - incline Motor Mounting

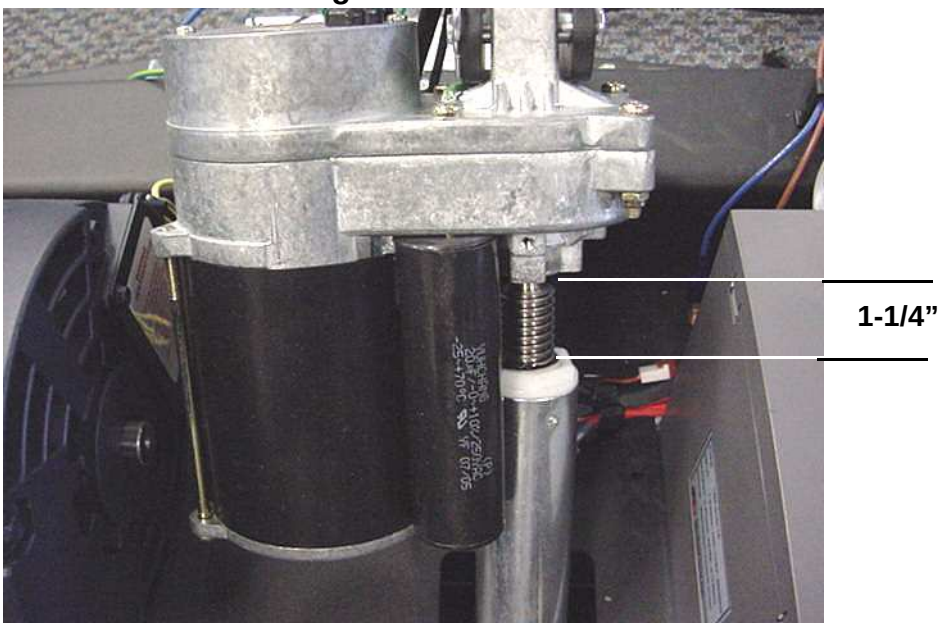

4. Plug the power cord into the wall outlet, set the treadmill circuit breaker in the “on” position. If the lift was not set at 0% incline the lift motor will immediately start to operate. The lift motor will continue to operate until the system is at 0% incline.

5. With the system at 0% incline, rotate the incline tube until the distance from the top of the incline tube to the incline motor is 1-1/4 inch. See Diagram 4.1. While rotating the incline tube, be sure the incline motor drive screw does not rotate. If the drive screw is rotated, return to step 4 and repeat steps 4 and 5.

6. Set the treadmill circuit breaker in the “off” position and remove the line cord from the wall outlet.

7. Replace the clevis and hitch pins removed in step 3. Return the treadmill to an upright position.

8. Plug the line cord into the wall outlet, set the treadmill circuit breaker in the “on” position.

9. Check the calibration of the incline system by performing the following steps:

   a Press the **INCLINE ▲** key until maximum incline is obtained, 15%.

   b Press the **INCLINE ▼** key to minimum incline is obtained, 0% on C956i treadmills or -3% on C966i treadmills.

12. Re-install the hood.

Procedure 4.2 - Adjusting Drive Belt Tension

1. Set the treadmill circuit breaker in the “off” position and unplug the line cord from the wall outlet.

2. Remove the hood.

3. Place the drive belt tension gauge on the drive belt as shown in Diagram 4.2.

Diagram 4.2 - Drive Belt Tension Gauge

4. The gauge should read approximately 80 inch/pounds. The drive belt tension is acceptable if it is in the range of 70 to 90 inch-pounds.

5. If the drive belt tension is less than 70 or greater than 90 inch/pounds, slightly loosen the four drive motor mounting bolts. The drive motor mounts on slotted holes allowing the drive motor to be move forward or rearward. Move the drive motor forward or rearwards, as required, until the belt gauge reads approximately 80 inch/pounds and tighten the four drive motor mounting bolts. See Diagram 4.3. Momentarily remove the drive belt tension gauge from the drive belt. Replace the drive belt tension gauge on the drive belt and re-adjust the drive belt tension, if necessary. Torque the four drive motor mounting bolts to 204 inch pounds (17 foot pounds).

Diagram 4.3 - Drive Belt Adjustment

6. Re-install the hood.

7. Plug the line cord into the wall outlet and set the treadmill circuit breaker in the “on” position.

8. Check treadmill operation per Section 3.

Procedure 4.3 - Treadmill Belt Cleaning

Procedure:

1. First, check for proper operation of the safety stop key. Stand to one side of the treadmill. Insure that the stop key tether is hanging straight down from the stop key and is not wrapped around the handle bars. Push the “Quick Start” button and wait for the display to count down and for the running belt to begin moving. Once the running belt is moving pull the safety stop key tether. **See the illustration below.**

CAUTION: If the running belt does not stop, turn off the power using the ON/OFF switch at the front of the treadmill and unplug the power cord. The treadmill must remain out of service until the stop switch is repaired.
If the running belt stops, continue with the cleaning procedure.

2. A clean, dry towel approximately 36 inches or 1 meter in length is required. Fold the towel in half lengthwise, lift the running belt up and insert the towel beneath the belt so that an end of towel extends on to each deck trim. **See the illustration below.**

3. Stand to one side of the treadmill, push the “Quick Start” button, grasp the towel as illustrated in the illustration above. **Note**: You will have 3 seconds to firmly grasp your hands on the towel before the treadmill running belt begins to move. Allow the treadmill to run for about one minute while holding the towel firmly in place.

CAUTION: If the towel becomes loose it may be pulled into the treadmill’s rollers. Pull the safety key tether to stop the treadmill and retrieve the towel, no damage should occur. Start the procedure over again. **See the illustration below**.

4. Keep one hand firmly grasped on the towel, use your other hand to pull on the safety stop key tether to stop the treadmill running belt. **See the illustration below**.

5. Turn the power off. Place your hands on the towel and push it up and down the length of the running deck several times to clean the deck.
6. Remove the towel.

It is recommended that this procedure be performed frequently to extend the life of the running belt and running deck.

Procedure 5.1 - Troubleshooting the Keypad and Upper PCA

Procedure

Note The red wire on the cables shown in Diagram 5.1 denotes pin 1. When these cables are inserted into their connectors, the red wire must align with the pin 1 designation on the PCA.

1. Set the treadmill's on/off switch in the "off" position. Remove the display back plate and display face per Procedure 6.10.

2. If the message **STUCK KEY** is displayed when the treadmill is turned on, skip to step 23.

3. If a key does not function, skip to step 18.

4. If the display does not illuminate, continue with step 5.

Diagram 5.1 - Display Face, Rear View

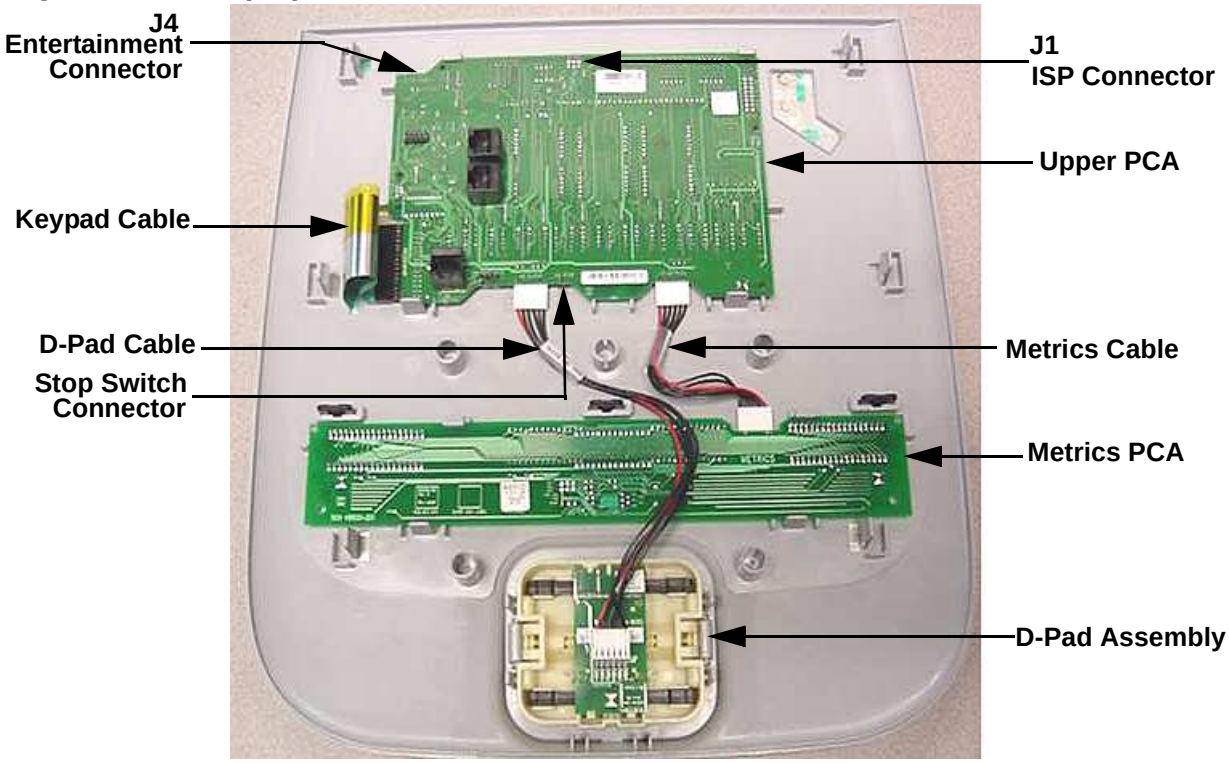

5. If the upper PCA is not illuminating, skip to step 12.

6. If the metrics PCA is not illuminating, continue with step 7.

7. Un-clip the metrics PCA from the display face and rotate it so that the front of the PCA is visible. Set the treadmill's on/off switch in the "on" position.

8. With a DC voltmeter, measure between TP1 (+8V) and TP3 (DGND) for 8 Vdc and between TP4 (+5V) and TP3 (DGND) for 5Vdc. See Diagram 5.2.

Diagram 5.2 - Metrics PCA, Front View

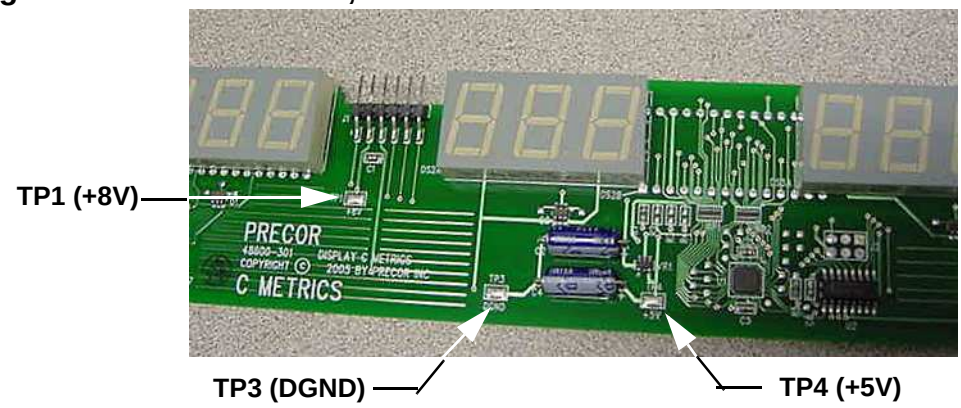

9. If 5 Vdc is not present on TP4 and 8 Vdc is present on TP1, replace the metrics PCA.

10. If 8 Vdc is not present on TP1 and the upper PCA is illuminating normally, replace the cable between the upper PCA and the metrics PCA.

11. If you have performed steps 7 - 10 and the metrics PCA still does not illuminate, contact Precor customer support for assistance.

12. Set the treadmill's on/off switch in the "on" position.

13. With a DC voltmeter, measure between pins 2 and 6 of J1 (ISP) for 5 Vdc and between pins 4 and 5 of J4 (entertainment) for 8 Vdc.

14. If 5 Vdc is not present on J1 and 8 Vdc is present on J4, replace the upper PCA.

15. If 8 Vdc is not present on J4, temporarily replace the upper PCA to power control module with a known good cable.

16. If the upper PCA illuminates normally, replace the upper PCA to power control module cable permanently. If the upper PCA still does not illuminate, replace the power control module.

17. If you have performed steps 12 - 16 and the upper PCA still does not illuminate, contact Precor customer support for assistance.

18. Set the treadmill's on/off switch in the "on" position.

19. If none of the keys on the display are functioning, check the stop switch cable connection to the upper PCA. If the stop switch is not connected or the stop switch is not functioning, none of the display keys will operate. This feature insures that the treadmill has a functioning stop switch when it is in use.

20. If a particular key is not functioning, perform the keyboard test in Procedure 2.1. If the test verifies that the key is not functioning, replace the display face.

21. If the display face has been replaced and the same key is still not functioning, replace the upper PCA.

22. If you have performed steps 18 - 22 and the same key is still not functioning, contact Precor customer support for assistance.

23. Remove the keypad cable from the upper PCA. See Diagram 5.1.

24. Set the treadmill's on/off switch in the "on" position.

25. If the **STUCK KEY** message is no longer displayed, replace the display face.

26. If the **STUCK KEY** is still being displayed with the keyboard cable disconnected, replace the upper PCA.

27. If you have performed steps 23 - 26 and the **STUCK KEY** message is still being displayed, contact Precor customer support for assistance.

Procedure 5.2 - Troubleshooting the Incline System

Incline System Description:

The incline system on these units consists of an AC line voltage driven incline motor (120 Vac or 240 Vac), and an internal 1 KΩ potentiometer for incline position identification. The incline motor contains two motor windings, one to operate the motor in an “upward” direction and the other to operate the motor in a “downward” direction. As the incline motor is operated, the motor also rotates the potentiometer via an internal gear system. Therefore, the position of the incline system can be determined by monitoring the value of the internal potentiometer. The incline motor is initially set at a known starting position (calibration, See Procedure 4.1), subsequent motor movement is tracked via the potentiometer resistance reading.

Note:
All resistance measurements must be performed with power removed from the treadmill. Performing resistance measurements with voltage applied may damage your ohmmeter.

Procedure

1. If the incline motor operates but creates a incline error (error 40 or 42) go to step 14. If the incline motor will not move continue with step 2.
2. Set the treadmill’s on/off switch in the “on” position.

Diagram 5.3 - Power Control Module

3. With the incline below 15%, connect an AC voltmeter between terminals 1 & 6 of the **INCLINE** connector. See Diagrams 5.3 and 5.4. Set the treadmill in the manual program and press the **INCLINE ▲** key. The AC voltmeter should read AC line voltage (either 120 Vac or 240 Vac)**.** Note that the AC line voltage reading will only be present before an error condition is displayed.

Diagram 5.4 - Power Control Module Connector Numbering

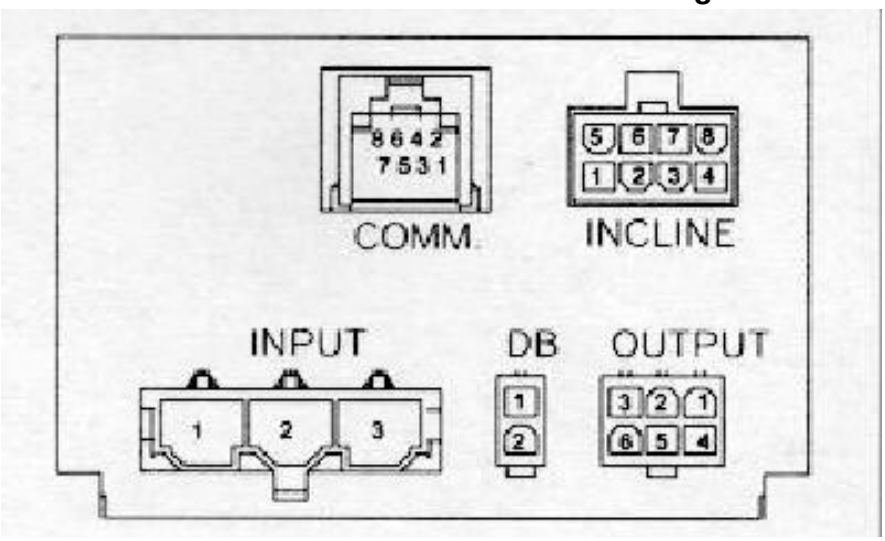

4. If the incline moves normally skip to step 7.

5. If the display indicates that the incline should be moving and the incline motor does not move and AC line voltage is present, skip to step 12.

6. If the display indicates that the incline should be moving and the incline motor does not move and AC line voltage is not present, replace the power control module.

7. With the incline above 0%, connect an AC voltmeter between terminals 1 & 5 of the **INCLINE** connector. See Diagrams 5.3 and 5.4. Set the treadmill in the manual program and press the **INCLINE ▼** key. The AC voltmeter should read AC line voltage (either 120 Vac or 240 Vac)**.** Note that the AC line voltage reading will only be present before an error condition is displayed.

8. If the incline moves normally skip to step 11.

9. If the display indicates that the incline should be moving and the incline motor does not move and AC line voltage is present, skip to step 12.

10. If the display indicates that the incline should be moving and the incline motor does not move and AC line voltage is not present, replace the power control module.

11. The incline is moving normally in both directions, there is either is not an incline problem or the problem is intermittent. Intermittent problems are often caused by poor connections or wiring problems.

12. Set the treadmill's on/off switch in the "off" position. Visually inspect the incline motor's wiring and connector for any broken or improperly crimped connections. With an ohmmeter, measure between terminals 1 & 5 and 1 & 6 of the **INCLINE** connector. Both readings should be approximately 12Ω. If either reading is significantly high or open replace the incline motor.

13. If you have performed all of the procedures above and have been unable to correct the problem, call Precor customer service.

14. Set the treadmill's on/off switch in the "off" position. Remove the incline motor's connector from the **INCLINE** connector on the power control module. Visually inspect the incline motor's wiring and connector for any broken or improperly crimped connections. With an ohmmeter, read between terminals 3 & 4, 4 & 8 and 3 & 8 of the **INCLINE** connector. Terminals 3 & 4 should read approximately 1KΩ. The sum of the readings between terminals 4 & 8 and 3 & 8 should total approximately 1KΩ. If either reading is significantly high or open, replace the incline motor.

15. If you have performed all of the procedures above and have been unable to correct the problem, call Precor customer service.

Procedure 5.3 - Troubleshooting Hand Held Heart Rate

Circuit Description
The hand held heart rate system is actually a dual system, that is, it can accept a heart rate signal from either the hand held heart rate contacts on the unit's handlebar or from a Polar heart rate chest strap transmitter. The PCA is configured for hand held priority. That is, if both a chest strap and hand heart rate signal are being received, the system will accept the hand held signal and ignore the chest strap signal. If a hand held signal is not being received, the system will accept the chest strap signal.

Note:
There are four typical failure modes for the hand held/chest strap heart rate system. They are: hand held is normal - no chest strap reading; no hand held reading - chest strap normal; no hand held or chest strap reading or constant or intermittent readings when neither hand held or chest strap are in use.

Diagram 6.3 - Hand held/chest strap heart rate PCA

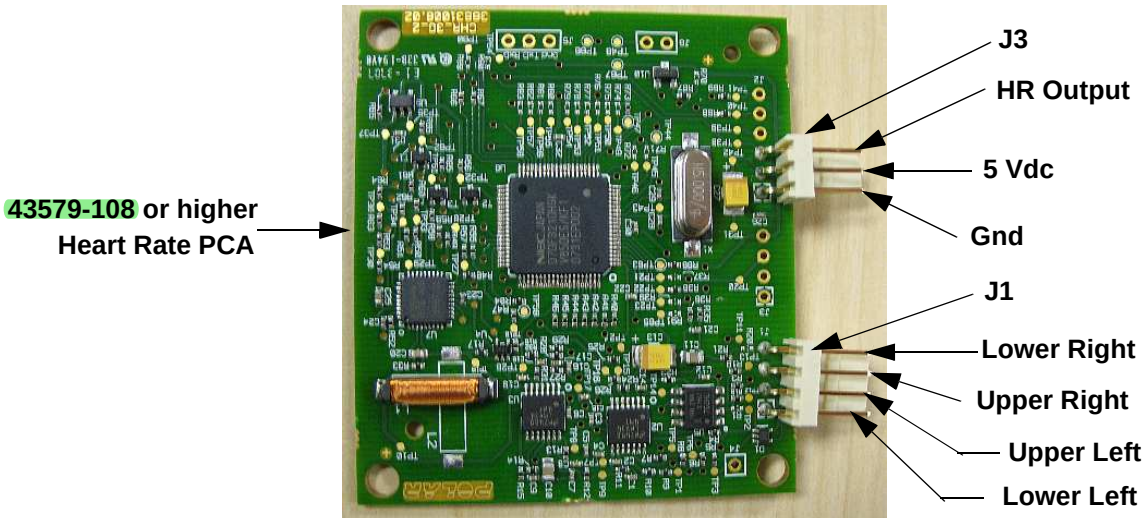

Normal hand held reading - No chest strap reading

1. Access the diagnostic program (Procedure 3.2). Advance to the heart rate display portion of the diagnostic program. Verify that a chest strap signal is not being accepted with either a Polar heart rate test transmitter or a known good chest strap transmitter. If this reading is good, skip to step 3.

2. Using a known good Polar heart rate chest strap, verify that the heart rate operates with the known good chest strap. If the known good Polar chest strap does corrects the problem, replace the original chest strap transmitter.

3. If the above procedures did not correct the problem, replace the heart rate PCA.

No hand held reading - Normal chest strap reading

4. Access the diagnostic program (Procedure 3.2). Advance to the heart rate display portion of the diagnostic program. Verify that a hand held signal is not being accepted by firmly grasping both the right and left hand held contacts on the handlebars. Cover as much of the contact surface area with your hands as possible (without moving your hands), you should receive a heart rate reading within ten seconds.

5. If the hand held signal is now being accepted, something in the near vicinity is radiating RF (radio frequency) energy that is being received by the chest strap portion of the heart rate PCA.

6. If a hand held signal still not being accepted, skip to step 8.

7. Replace the heart rate PCA with a 43579-108 (or higher) heart rate PCA. 43579-108 and higher versions of heart rate PCA are less susceptible to radiated RF energy.

8. Access the diagnostic program (Procedure 3.2). Advance to the heart rate display portion of the diagnostic program. Verify that a hand held signal is not being accepted by firmly grasping both the right and left hand held contacts with the opposite hands, right hand on the left handlebar contacts and left hand on the right handlebar contacts. Cover as much of the contact surface area with your hands as possible, you should receive a heart rate reading within ten seconds. If a hand held signal is still not being accepted, skip to step 10.

9. If a hand held signal was accepted in step 11, the hand held contact wiring is reversed. The end of the wire harness that connects to the hand held contacts in the handlebar is segregated into two groups. One group has blue shrink wrap around it and the other group has black shrink wrap around it. The “blue” group must go to the right hand contacts and the “black” group must go to the left hand contacts. In both groups the black wire must go to the lower contact and the red wire must go to the upper contact. If necessary, rewire the hand held contacts as described above and test as described in step 4.

10. If the wiring is correct, refer to Diagram 6.3 for the following measurements. With an ohmmeter measure between the “lower right contact” pin on the J1 connector and the lower right hand held heart rate contact on the handlebar. The reading should be 1 Ω or less. Measure between the “upper right contact” pin on the J1 connector and the upper right hand held heart rate contact on the handlebar. The reading should be 1 Ω or less. Measure between the “upper left contact” pin on the J1 connector and the upper left hand held heart rate contact on the handlebar. The reading should be 1 Ω or less. Measure between the “lower left contact” pin on the J1 connector and the lower left hand held heart rate contact on the handlebar. The reading should be 1 Ω or less. If any of the above readings are greater than 1 Ω, replace the heart rate PCA to handlebar wire harness.

No hand held reading - No chest strap reading

11. Access the diagnostic program (Procedure 3.2). Advance to the heart rate display portion of the diagnostic program. Verify that neither a chest strap signal or a hand held signal is being accepted with either a heart rate test transmitter or a chest strap transmitter.

12. Check the plug/connector connections on both the heart rate PCA (J4), and upper PCA (J1).

13. If neither a chest strap signal or a hand held signal is being accepted, measure between the “ground” and “5 Vdc” pins on J4 for 5 Vdc. If 5 Vdc is present, replace the heart rate PCA.

14. If 5 Vdc is not present, remove the connector from J4 of the heart rate PCA. Measure between the “ground” and “5 Vdc” pins of the connector (just removed from the heart rate PCA) for 5 Vdc. If 5 Vdc is present, replace the heart rate PCA. If the 5 Vdc is not present, measure between the corresponding pins of J1 on the upper PCA (red and black wires). If 5 Vdc is not present replace the upper PCA. If 5 Vdc is present, replace the upper PCA to heart rate PCA cable.

Constant or intermittent readings when neither the hand held or chest strap is in use

15. Verify that a ferrite core is clamped around the heart rate PCA to upper PCA cable.

16. Constant or intermittent heart rate readings when neither heart rate system is in use is caused by something in the near vicinity radiating RF energy that is being received by the chest strap portion of the heart rate PCA.

17. Replace the heart rate PCA with a 43579-108 (or higher) heart rate PCA. 43579-108 and higher versions of heart rate PCA are less susceptible to radiated RF energy

Procedure 5.4 - Troubleshooting the External A.C. Power Source

It is extremely important that any Precor treadmill be connected to and operated on a dedicated 20 amp A.C. circuit. A 20 amp dedicated circuit is defined as: a circuit fed by a 20 amp circuit breaker that feeds a single load. A treadmill operating from a non-dedicated circuit or a circuit breaker of less than 20 amps capacity will not have the necessary power available to operate normally under higher load conditions. The lack of available power can cause any number of symptoms ranging from numerous intermittent (seemingly inexplicable) error conditions, poor speed control, or tripping the house circuit breaker.
If any of the above symptoms exist the external A.C. circuit must be checked and confirmed to be a 20 amp dedicated circuit **before** troubleshooting the treadmill.
In addition the A.C. voltage must be checked. Nominal A.C. operating voltage on 120 Vac circuits is 105 Vac to 120 Vac. Nominal A.C. operating voltage on 240 Vac circuits is 208 Vac to 240 Vac.
For operator safety considerations and to minimize electrostatic discharge conditions the A.C. frame ground continuity must also be verified to be a low resistance connection to the A.C. distribution ground bar.

Important
If the A.C. circuit feeding a treadmill is found to be a non-dedicated circuit or a circuit equipped with a circuit breaker with a capacity of less than 20 amps, the A.C. circuit must be corrected to be a 20 amp dedicated circuit **before** any reliable troubleshooting can be performed on the treadmill. More importantly, a non-dedicated circuit may constitute a safety hazard to the treadmill operator.

120 Vac Systems

120 Vac distribution systems utilize a single pole circuit breaker (hot lead) and a neutral lead connected to a common neutral (ground) bar. The A.C. safety ground (green wire) is connected to a separate ground bar in the distribution system.

The most common problems found are (1) the circuit is fed by a circuit breaker of less than 20 amp capacity, (2) the circuit breaker correctly feeds a single A.C. outlet but the neutral is common between several A.C. outlets and (3) both the hot and neutral leads feed several A.C. outlets. The appropriate correction action or actions (see below) must be followed if any of the above conditions exist. **Corrective actions should only be undertaken by a licensed electrician.**

1. **The circuit breaker feeding the treadmill is not a 20 amp circuit breaker.**
   If the circuit breaker is greater than 20 amps, the circuit breaker should be replaced with a 20 amp circuit breaker. If the circuit breaker is less than 20 amps the circuit breaker must be replaced with a 20 amp circuit breaker and the wiring from the A.C. distribution must be capable of safely handing 20 amps. If the A.C. wiring is under sized, it must be replaced with wire capable of safely handling 20 amps. Please, refer to local electrical codes when determining the appropriate wire size for a 20 amp circuit.

2. **The circuit breaker correctly feeds a single A.C. outlet but the neutral is common between several A.C. outlets.**
   The common neutral lead must be removed from treadmill's A.C. outlet and a new neutral lead from the treadmill's A.C. outlet to the A.C. neutral distribution bar must be added.

3. **Both the hot and neutral leads feed several A.C. outlets.**
   Both the common neutral and hot leads must be removed from treadmill's A.C. outlet and a new neutral lead and hot lead from the treadmill's A.C. outlet to the A.C. neutral distribution bar and circuit breaker must be added.

240 Vac Systems

240 Vac distribution systems utilize a double pole circuit breaker (two hot leads) The A.C. safety ground (green wire) is connected to a ground bar in the distribution system.
The most common problems found are (1) the circuit is fed by a circuit breaker of less than 20 amp capacity and (2) both the hot leads feed several A.C. outlets. The appropriate correction action or actions (see below) must be followed if any of the above conditions exist. **Corrective actions should only be undertaken by a licensed electrician.**

1. **The circuit breaker feeding the treadmill is not a 20 amp circuit breaker.**
   If the circuit breaker is greater than 20 amps, the circuit breaker should be replaced with a 20 amp circuit breaker. If the circuit breaker is less than 20 amps the circuit breaker must be replaced with a 20 amp circuit breaker and the wiring from the A.C. distribution must be capable of safely handing 20 amps. If the A.C. wiring is under sized, it must be replaced with wire capable of safely handling 20 amps. Please, refer to local electrical codes when determining the appropriate wire size for a 20 amp circuit.

2. **Both the hot leads feed several A.C. outlets.**
   Both hot leads must be removed from treadmill's A.C. outlet and two new hot leads from the treadmill's A.C. outlet to the circuit breaker must be added.

A licensed electrician may use the followings hints to determine if an A.C. service is dedicated.

1. If, on a 120 Vac system, the A.C. distribution panel contains more circuit breakers than neutral leads, the system has shared neutral leads and is not dedicated.

2. If an A.C. outlet (120 or 240 Vac) has multiple hot and/or neutral leads, it is not a dedicated.

If either of the above conditions exist, the system is not dedicated. However, absence of the above conditions does not necessarily mean that the system is dedicated. If any doubt exists about A.C. systems dedication, point to point tracing of the A.C. wiring may be the only way to prove system dedication.

Procedure 5.5 - Troubleshooting the 3 Phase AC Drive Motor System

Circuit Description
The power control module converts single phase 120Vac or 240Vac into three phase variable frequency current for the AC drive motor. The motor speed is controlled by controlling the frequency of the drive motor current.

1. When taking voltage readings of the AC drive motor current, the readings will not be accurate because of the frequencies being used, however, they are indicative of the presence of drive motor voltage and relative frequency changes.

2. If the symptoms are the drive motor starts when you force the running belt to move and once running the drive motor runs “rough”, skip to step 10. If the drive motor will not start continue with step 3.

3. If the drive motor does not start, the power control module will only apply voltage for a couple of seconds before it shuts down. Therefore the voltage readings in the following step must be taken within the first couple of seconds after the treadmill is instructed to start the running belt.

4. Connect an AC voltmeter between terminals 4 & 5 of the **OUTPUT** connector on the power control module. See Diagrams 5.3 and 5.4. Set the treadmill’s on/off switch in the “on” position. Press the **QUICK START** key. If the power control module is supplying output, you will momentarily read approximately 55 Vac. Set the treadmill’s on/off switch in the “off” position.

5. Repeat the procedure in step 4 between terminals 4 & 6 of the **OUTPUT** connector on the power control module.

6. Repeat the procedure in step 4 between terminals 5 & 6 of the **OUTPUT** connector on the power control module.

7. If one or more of voltage readings in steps 4 through 6 are not present, replace the power control module. If the voltage readings in steps 4 through 6 are present, continue with step 8.

8. Set the treadmill’s on/off switch in the “off” position. Disconnect the drive motor connector from the **OUTPUT** connector on the power control module. With an ohmmeter, measure between terminals 4 & 5, 4 & 6 and 5 & 6 of the drive motor connector. Each reading should be approximately 2.5Ω. If any of the readings are significantly high or open, replacement the drive motor.

9. If you have performed all of the procedures above and have been unable to correct the problem, call Precor customer service.

10. Connect an AC voltmeter between terminals 4 & 5 of the **OUTPUT** connector on the power control module. See Diagrams 5.3 and 5.4. Set the treadmill's on/off switch in the "on" position. Press the **QUICK START** key. If the power control module is supplying output, you will momentarily read approximately 55 Vac.

11. Repeat the procedure in step 4 between terminals 4 & 6 of the **OUTPUT** connector on the power control module.

12. Repeat the procedure in step 4 between terminals 5 & 6 of the **OUTPUT** connector on the power control module.

13. If one or more of voltage readings in steps 4 through 6 are not present, replace the power control module. If the voltage readings in steps 10 through 12 are present, skip to step 8

Procedure 5.6 - Running Belt & Deck Troubleshooting

This procedure is to be used to determine the condition of the running belt and running deck combination. A clamp-on ammeter will be used to measure the treadmill's A.C. input current under load. The A.C input current is a direct indication of the load being placed on the treadmill. Treadmill loading consists of several factors, the user's weight, treadmill speed, treadmill incline setting and the condition of the running belt and running deck condition. By making all of the other factors consistent we will be able to determine the relative condition of the running belt and deck combination. The A.C input current measurements will be performed at 3 m.p.h. (4.8 k.p.h.) and 0% incline. Because the loading varies with the user's weight, you should perform the A.C input current measurement test on a new running belt and deck combination. That will provide you with a benchmark reading to account for your individual weight.

Because the A.C. input current reading will pulse between a high value (during foot plant) and a low reading (between foot plants) we suggest the use of an analog clamp-on ammeter. An analog ammeter makes it very easy to see the A.C. current pulses. The refresh rate on digital ammeters may make it difficult to see the current peaks.

1. Remove the treadmill's motor cover and place the A.C clamp-on ammeter on the brown wire from the A.C. input module (or A.C. power cord) to the circuit breaker (on/off switch). See the illustration below.

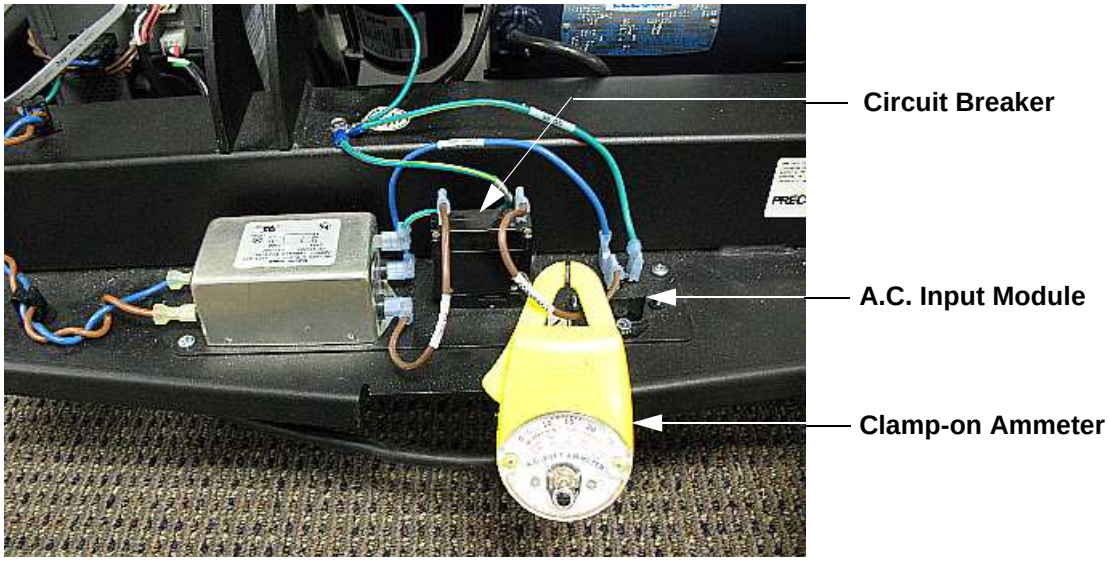

2. Set the treadmill's speed at 3 m.p.h. (4.8 k.p.h.) and the incline at 0%. Walk on the treadmill and observe the peak A.C. current reading. Typical peak A.C. current readings on a new running belt and deck are between 3 and 6 amperes.

3. If the peak current reading approach 20 amperes, the running belt should be replaced. The running deck should be flipped or replaced if the running deck has been previously flipped. See Procedure X for running belt and running deck replacement.

4. If the peak A.C. current readings are greater than on a new running belt and deck combination but not approaching 20 amperes, the reading will give you an indication of the running belt and deck combination's general condition.

Procedure 6.1 - Replacing the Incline Motor

Note:
The replacement incline motor must be calibrated prior to installation (See Procedure 4.1).

1. Set the treadmill's circuit breaker in the "off" position and remove the AC line cord from the AC outlet.

2. Disconnect the incline motor connector from the **INCLINE** connector on the power control module. See Diagrams 5.3 and 5.4. Lay the replacement incline motor on the floor in front of the treadmill and insert its connector in the **INCLINE** connector on the power control module.

3. Calibrate the incline motor per Procedure 4.1.

4. Either lay the treadmill on its side or securely block the front of the treadmill so that the treadmill's weight is off of the incline platform.

5. Remove the defective incline motor as follows: remove the screw that fastens the frame ground wire (green with yellow stripe) to the treadmill frame. Remove the hitch and clevis pins from the top and bottom of the incline motor. Remove the incline motor from the treadmill.

6. Set the calibrated incline motor in its mounting position. Replace the upper clevis and hitch pins.

7. Replace the lower clevis and hitch pins. It may be necessary to slightly rotate the incline tube to align it so that the clevis pin may be inserted. To align the hole in the incline tube rotate it in the direction that will cause the least amount of rotation to make alignment possible.

8. Connect the frame ground wire to the treadmill frame with the screw removed in step 5. Route both incline motor cables as noted in the incline motor removal procedure.

9. Insert the incline motor connector in the **INCLINE** connector on the power control module.

10. Check treadmill operation per Procedure 3.

Procedure 6.2 - Replacing the Incline Platform

1. Set the treadmill circuit breaker in the “off” position. Remove the AC line cord from the AC outlet.

2. Carefully, lay the treadmill on its side.

3. Remove the hitch pin and clevis pin that fastens the incline motor tube to the incline platform. While the incline tube is not fastened to the incline platform, care must be taken to not allow the incline tube to rotate. If the incline tube rotates, the incline motor must be re-calibrated per Procedure 4.1.

4. Remove the two large hitch pins (one each side) from the incline platform to frame mounting. See Diagram 6.1. Remove the incline platform mounting pins and remove the incline platform from the treadmill.

Diagram 6.1 - Incline Platform Mounting

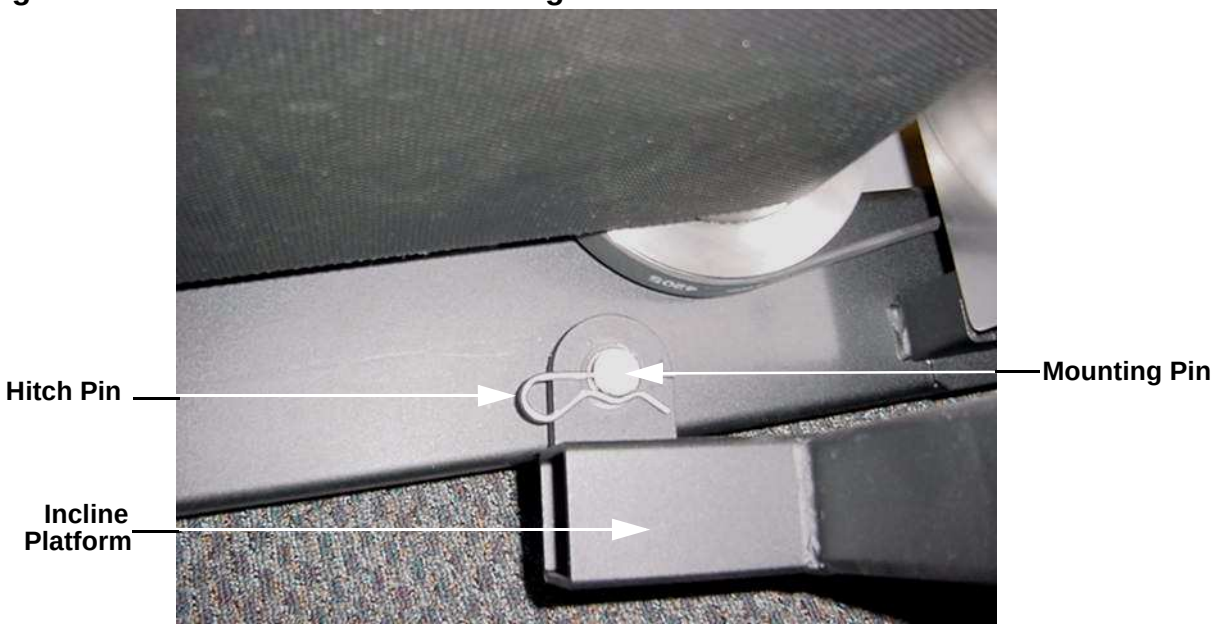

5. Remove the wheels from the old incline platform and remount them on the replacement incline platform.

6. Set the replacement incline platform in it mounting position. Align the key the incline mounting pin with the keyway in the frame and slide the incline mounting pins into place. See Diagram 6.2. Fasten the incline mounting pins with the hitch pins removed in step 4.

7. If the incline tube or the incline motor’s drive screw have been moved, re-calibrate the incline motor per Procedure 4.1, at this time.

Diagram 6.2 - Incline Mounting Pin

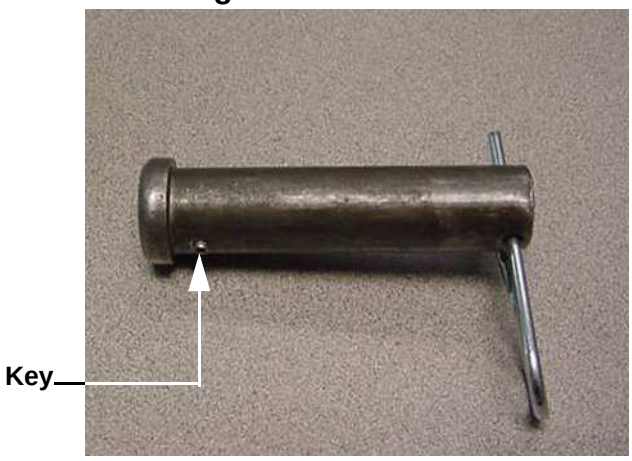

8. Fasten the incline tube to the incline platform with the clevis pin and hitch pin removed in step 3.

9. Set the treadmill in its upright position and thoroughly check it per Section 3.

Procedure 6.3 - Replacing the Power Control Module

1. Set the treadmill's on/off switch in the "off" position and remove the AC line cord from the AC outlet.

2. Remove the treadmill's hood.

3. Disconnect the **COMM, INCLINE, INPUT, DB** and **OUTPUT** connectors from the power control module. See Diagram 5.3 and 5.4.

4. Remove the four screws that mount the power control module. See Diagram 6.3.

Diagram 6.3 - Power Control Module Mounting

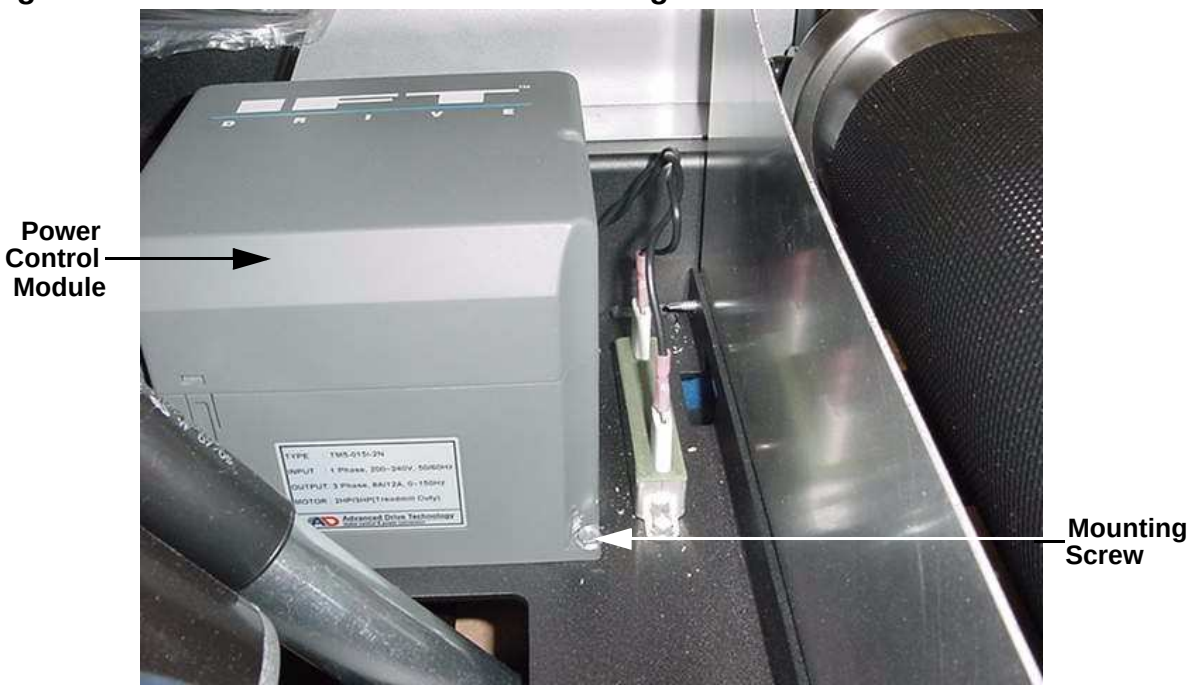

5. Set the replacement power control module in its mounting position.

6. Fasten the power control module with the four screws removed in step 4.

7. Reconnect the **COMM, INCLINE, INPUT, DB** and **OUTPUT** connectors removed in step 3. The mating connectors on the power control module are polarized, therefore they can not be reconnected incorrectly.

8. Replace the treadmill's hood.

9. Thoroughly check the treadmill per Section 3.

Procedure 6.4 - Replacing Drive Motor

1. Set the treadmill's on/off switch in the "off" position and unplug the treadmill's line cord from the AC outlet.

1. Remove the hood.

2. Disconnect the drive motor connector from the **OUTPUT** connector on the power control module.

3. Remove the four bolts that fasten the drive motor to the frame. Remove the drive belt from the drive motor.

4. Set the replacement drive motor in its mounting position. Place the drive belt on the drive roller pulley and on the drive motor pulley.

5. Adjust the drive belt tension and complete the motor installation per Procedure 4.2.

6. Thoroughly check the treadmill per Section 3.

Procedure 6.5 - Replacing the Circuit Breaker

1. Set the treadmill circuit breaker in the “off” position and unplug the treadmill’s line cord from the AC outlet.

2. Remove the treadmill’s hood.

3. Remove the two screws that fastens the AC input panel to the frame,. See Diagram 6.4.

4. Disconnect the wiring from the circuit breaker (2 blue wires on 120 Vac treadmills or 2 blue and 2 brown wires on 240 Vac treadmills).

Diagram 6.4 - AC Input Panel

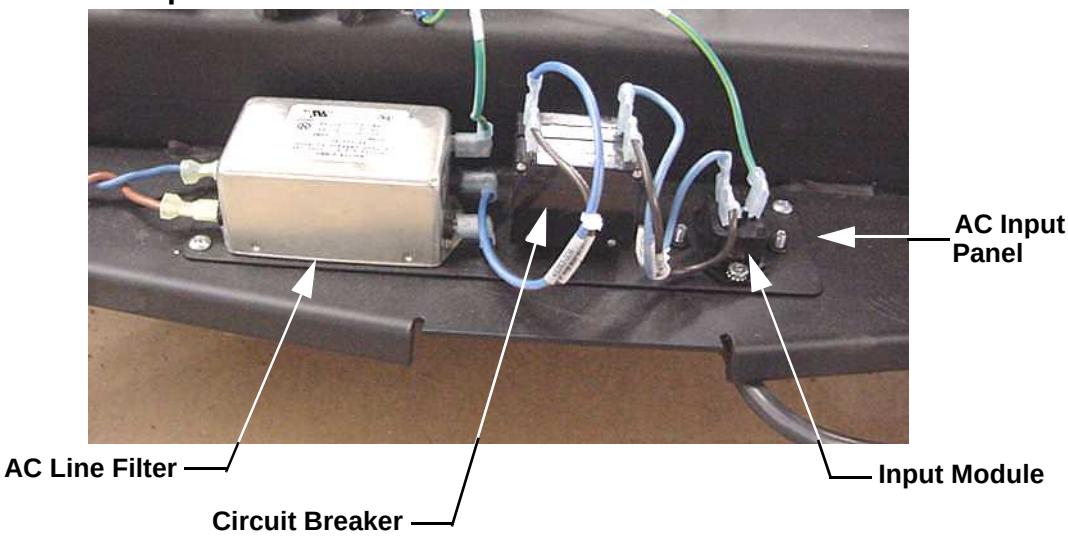

5. Lift the AC input panel from the frame and rotate it to expose the circuit breaker mounting screws. See Diagram 6.5.

Diagram 6.5 - AC Input Panel

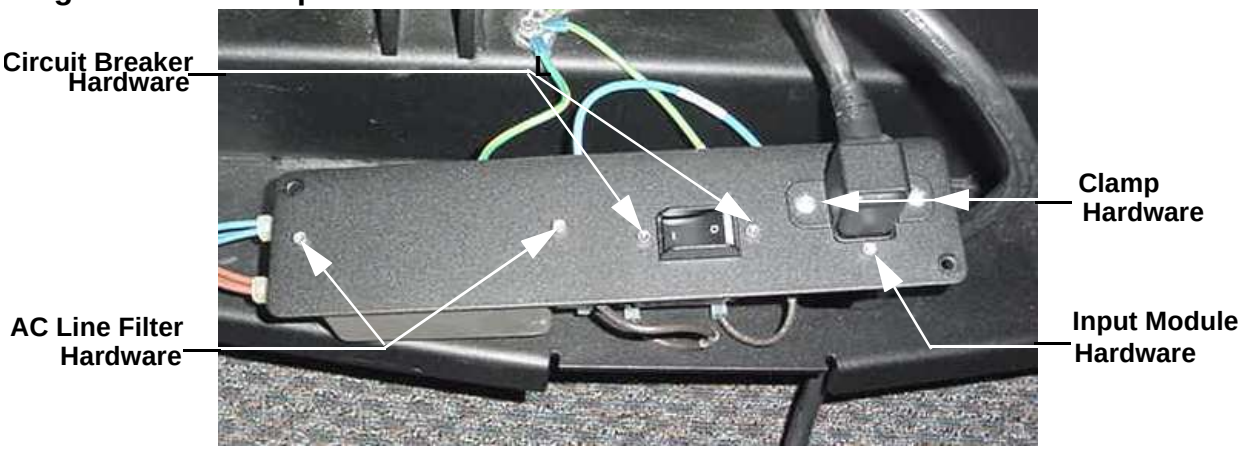

6. Remove the two screws retaining the circuit breaker and remove the circuit breaker.

7. Reference the label on the replacement circuit breaker and set the circuit breaker in its mounting position with the “LINE” side of the breaker facing the input module and the “LOAD” side of the circuit breaker facing the AC line filter. Fasten the circuit breaker with the hardware removed in step 6.

8. On 120 Vac treadmills connect the blue wire from the input module to the “LINE” terminal on the circuit breaker and the blue wire from the AC line filter to the “LOAD” terminal on the circuit breaker.

9. On 240 Vac treadmills connect the blue wire from the input module to the upper “LINE” terminal on the circuit breaker and the blue wire from the AC line filter to the upper “LOAD” terminal on the circuit breaker. Connect the brown wire from the input module to the lower “LINE” terminal on the circuit breaker and the brown wire from the AC line filter to the lower “LOAD” terminal on the circuit breaker.

10. Set the input panel in its mounting position and fasten it with the hardware removed in step 3.

11. Thoroughly check the treadmill per Section 3.

Procedure 6.6 - Replacing the Line Filter

1. Set the treadmill circuit breaker in the “off” position and unplug the treadmill’s line cord from the AC outlet.

2. Remove the treadmill’s hood.

3. Remove the two screws that fastens the AC input panel to the frame,. See Diagram 6.4.

4. Disconnect the wiring from the AC line filter (2 blue wires, 2 brown wires and a green/yellow wire.

5. Lift the AC input panel from the frame and rotate it to expose the AC line filter mounting screws. See Diagram 6.5.

6. Remove the screws that retain the AC line filter. Remove the AC line filter.

7. Set the replacement AC line filter in its mounting position with the side with three terminal facing the circuit breaker.

8. On 120 Vac and 240 Vac treadmills, connect the blue wire from the power control module to the L1 terminal on the “LOAD” side of the AC line filter and the brown wire from the power control module to the L2 terminal on the “LOAD” side of the AC line filter.

9. On 120 Vac treadmills, connect the blue wire from the input module to the L1 terminal on the “LINE” side of the AC line filter, the brown wire from the circuit breaker to the L2 terminal on the “LINE” side of the AC line filter and the green/yellow wire to the (annunciated) terminal mounted directly on the line filter case.

10. On 240 Vac treadmills, connect the blue wire from the circuit breaker to the L1 terminal on the “LINE” side of the AC line filter, the brown wire from the circuit breaker to the L2 terminal on the “LINE” side of the AC line filter and the green/yellow wire to the (annunciated) terminal mounted directly on the line filter case.

11. Set the input panel in its mounting position and fasten it with the hardware removed in step 3.

12. Thoroughly check the treadmill per Section 3.

Procedure 6.7 - Replacing the Line Cord

1. Set the treadmill circuit breaker in the “off” position and unplug the treadmill’s line cord from the AC outlet.

2. Remove the treadmill’s hood.

1. Remove the two screws that fastens the AC input panel to the frame,. See Diagram 6.4.

2. Lift the AC input panel from the frame and rotate it to expose the AC line cord clamp screws. See Diagram 6.5.

3. Remove the hardware that retains the AC line cord clamp and remove the clamp.

4. Disconnect the AC line cord from the input module.

5. Feed the end of the replacement AC line cord that mates with the input module through its hole in the frame and firmly insert it into the input module.

6. Set the AC line cord clamp in its mounting position and fasten it with the hardware removed in step 3.

7. Set the input panel in its mounting position and fasten it with the hardware removed in step 3.

8. Check treadmill operation per Section 3.

Procedure 6.8 - Replacing the Input Module

1. Set the treadmill circuit breaker in the “off” position and unplug the treadmill’s line cord from the AC outlet.

2. Remove the treadmill’s hood.

3. Remove the two screws that fastens the AC input panel to the frame,. See Diagram 6.4.

4. Lift the AC input panel from the frame and rotate it to expose the AC line cord clamp screws and input module screws. See Diagram 6.5.

5. Remove the hardware that retains the AC line cord clamp and remove the clamp.

6. Disconnect the AC line cord from the input module.

7. Disconnect the wiring from the input module (1 blue wire, 1 brown wire and 1 green/yellow wire).

8. Remove the hardware that retains the input module and remove the input module.

9. Set the input module in its mounting position with the side with two terminals facing the circuit breaker.

10. Connect the blue wire removed in step 5 to terminal “N”, the brown wire to terminal “L” and the green/yellow wire to terminal “E” of the input module. See Diagram 6.6.

Diagram 6.6 - Input Module Wiring

11. Insert the AC line cord firmly into the input module. Set the AC line cord clamp in its mounting position and fasten it with the hardware removed in step 5.

12. Set the input panel in its mounting position and fasten it with the hardware removed in step 3.

13. Check treadmill operation per Section 3

Procedure 6.9 - Replacing the End Cap or Belt Guard

1. Set the treadmill circuit breaker in the “off” position and unplug the treadmill’s line cord from the AC outlet.

2. Remove the four screws (2 lower screws, each side) that retain the end cap. **Do Not** loosen or move the take up roller mounting/adjustment bolts. Doing so will change the running belt’s tension and alignment. See Diagram 6.7.

Diagram 6.7 - End Cap Mounting

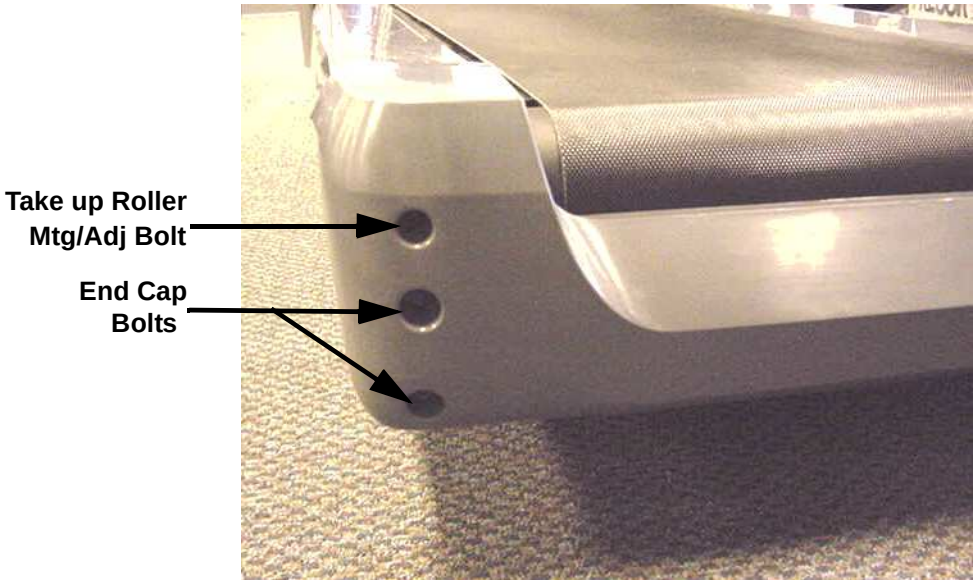

3. Slide the end cap off of the treadmill.

4. If you are not replacing the belt guard skip to step 8.

5. The tabs on the belt guard (1 each side) snap into the take up roller mounts See Diagram 6.8.

6. Press inwards on the belt guard to remove the belt guard’s tabs from the take up roller mounts. Slide the belt guard off of the treadmill.

7. Slide the replacement belt guard into place so that the tabs on the belt guard engage in both take up roller mounts.

8. Slide the end cap into place so that the tabs on the end cap engage in the notches in the running belt trim strips. See Diagram 6.8.

9. Fasten the end cap with the hardware removed in step 2.

Diagram 6.8 - Belt Guard Mounting

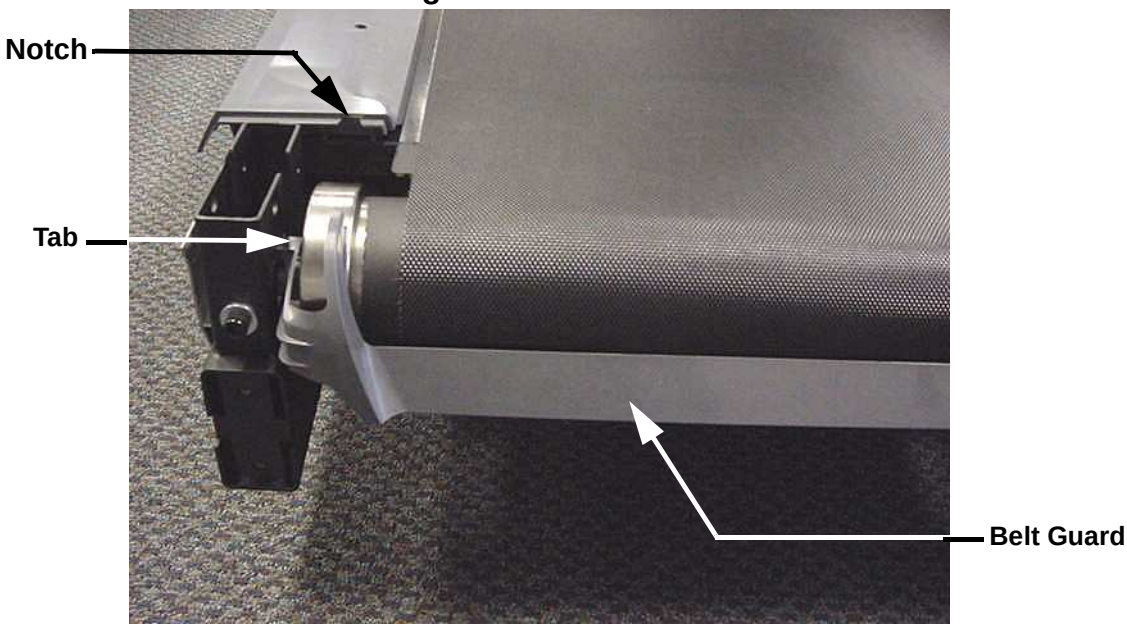

Procedure 6.10 - Replacing the Upper PCA

1. Set the treadmill circuit breaker in the “off” position and unplug the treadmill’s line cord from the AC outlet.

2. The PCA’s in the display are static sensitive. They can be damaged if proper static prevention equipment is not used. Attach an anti-static wrist strap to your arm, then connect the ground lead of the wrist strap to the treadmill’s frame ground.

3. Remove the eight screws that fasten the display back cover and remove the display back cover.

4. Disconnect the data cable, 2 CSAFE cables and the heart rate cable from the upper PCA. See Diagram 6.9.

Diagram 6.9 - Upper PCA and Heart Rate PCA Mounting

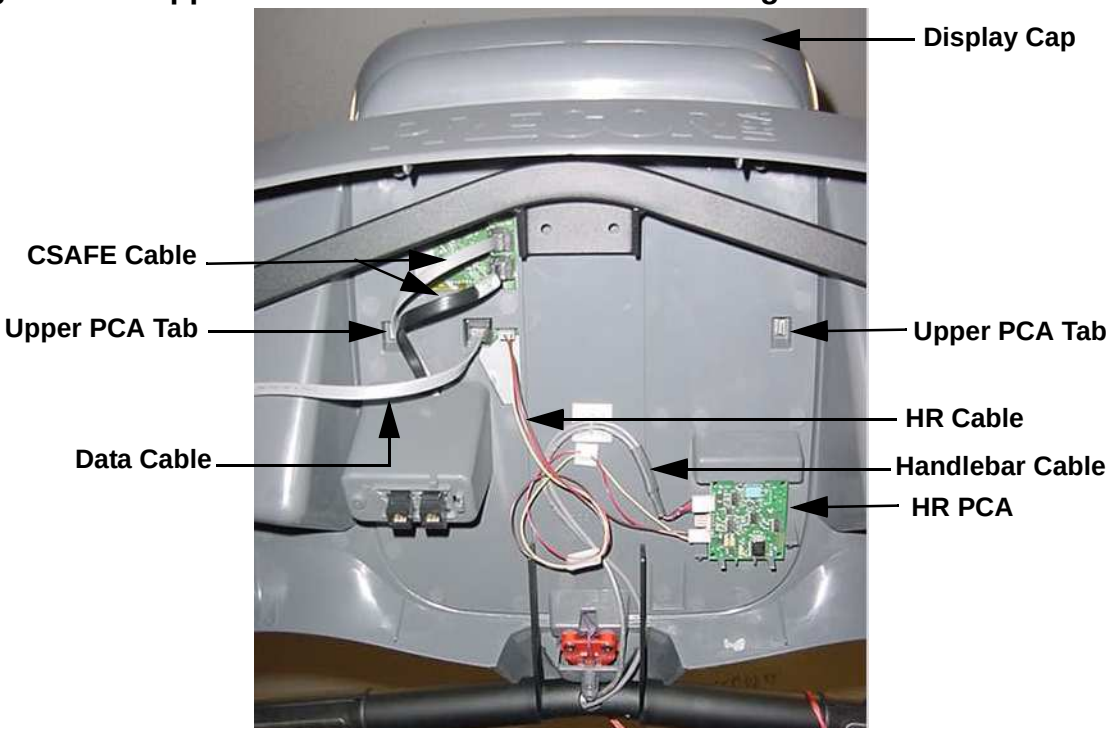

5. The display cap snaps onto the display with two tabs. Reach into the upper portion of the display and locate the two display cap tabs. Press the tabs outwards to disengage the tabs and remove the display cap.

6. The display face snaps onto the display with six tabs. One of the tabs is behind the HR PCA. The HR PCA snaps into its mounting. Press its tabs downward and remove the HR PCA from its mounting.

7. Press the four display face tabs outwards and disengage the display face from the display. Disconnect the stop switch cable from the upper PCA and remove the display face from the display.

8. Disconnect the Metrics cable, D-pad cable and the keypad cable from the upper PCA. See Diagram 5.1.

9. The upper PCA snaps into the display face. Press the upper PCA tabs outward and remove the upper PCA from the display face.

10. Snap the replacement upper PCA into its mounting on the display face.

11. The red wire in the Metrics and D-pad cables indicate pin 1. Align the red wire in the Metrics and D-pad cables with the pin 1 markings on the upper PCA. Connect the Metrics, D-pad and keypad cables to the upper PCA.

12. Connect the stop switch cable to upper PCA and snap the display face into place on the display.

13. Reconnect the data cable, two CSAFE cables and the HR cable to the upper PCA as shown in Diagram 6.9.

14. Snap the HR PCA into its mounting. See Diagram 6.9.

15. Snap the display cap into place on the display.

16. Replace the display back cover with the hardware removed in step 3.

17. Check treadmill operation per Section 3.

Procedure 6.11 - Replacing the Metrics PCA

1. Set the treadmill circuit breaker in the “off” position and unplug the treadmill’s line cord from the AC outlet.

2. The PCA’s in the display are static sensitive. They can be damaged if proper static prevention equipment is not used. Attach an anti-static wrist strap to your arm, then connect the ground lead of the wrist strap to the treadmill’s frame ground.

3. Remove the eight screws that fasten the display back cover and remove the display back cover.

4. Disconnect the data cable, 2 CSAFE cables and the heart rate cable from the upper PCA. See Diagram 6.9.

5. The display cap snaps onto the display with two tabs. Reach into the upper portion of the display and locate the two display cap tabs. Press the tabs outwards to disengage the tabs and remove the display cap.

6. The display face snaps onto the display with six tabs. One of the tabs is behind the HR PCA. The HR PCA snaps into its mounting. Press its tabs downward and remove the HR PCA from its mounting.

7. Press the four display face tabs outwards and disengage the display face from the display. Disconnect the stop switch cable from the upper PCA and remove the display face from the display.

8. Disconnect the Metrics cable from the Metrics PCA. See Diagram 5.1.

9. The Metrics PCA snaps into the display face. Press the Metrics PCA tabs outward and remove the Metrics PCA from the display face.

10. Snap the replacement Metrics PCA into its mounting on the display face.

11. The red wire in the Metrics cable indicates pin 1. Align the red wire in the Metrics cable with the pin 1 markings on the Metrics PCA. Connect the Metrics cable to the Metrics PCA.

12. Connect the stop switch cable to upper PCA and snap the display face into place on the display.

13. Reconnect the data cable, two CSAFE cables and the HR cable to the upper PCA as shown in Diagram 6.9.

14. Snap the HR PCA into its mounting. See Diagram 6.9.

15. Snap the display cap into place on the display.

16. Replace the display back cover with the hardware removed in step 3.
17. Check treadmill operation per Section 3.

Procedure 6.12 - Replacing the D-Pad Assembly

1. Set the treadmill circuit breaker in the “off” position and unplug the treadmill’s line cord from the AC outlet.

2. The PCA’s in the display are static sensitive. They can be damaged if proper static prevention equipment is not used. Attach an anti-static wrist strap to your arm, then connect the ground lead of the wrist strap to the treadmill’s frame ground.

3. Remove the eight screws that fasten the display back cover and remove the display back cover.

4. Disconnect the data cable, 2 CSAFE cables and the heart rate cable from the upper PCA. See Diagram 6.9.

5. The display cap snaps onto the display with two tabs. Reach into the upper portion of the display and locate the two display cap tabs. Press the tabs outwards to disengage the tabs and remove the display cap.

6. The display face snaps onto the display with six tabs. One of the tabs is behind the HR PCA. The HR PCA snaps into its mounting. Press its tabs downward and remove the HR PCA from its mounting.

7. Press the four display face tabs outwards and disengage the display face from the display. Disconnect the stop switch cable from the upper PCA and remove the display face from the display.

8. Disconnect the D-pad cable from the D-pad assembly. See Diagram 5.1.

9. The D-pad assembly snaps into the display face. Release the D-pad assembly’s tabs and push the D-pad assembly out of the front of the display face.

10. With the replacement D-pad assembly oriented so that the incline and speed switches are correctly aligned, slide the D-pad assembly into the display face until it snaps into place.

11. The red wire in the D-pad cable indicates pin 1. Align the red wire in the D-pad cable with the pin 1 markings on the D-pad PCA. Connect the D-pad cable to the D-pad PCA.

12. Connect the stop switch cable to upper PCA and snap the display face into place on the display.

13. Reconnect the data cable, two CSAFE cables and the HR cable to the upper PCA as shown in Diagram 6.9.

14. Snap the HR PCA into its mounting. See Diagram 6.9.

15. Snap the display cap into place on the display.

16. Replace the display back cover with the hardware removed in step 3.
17. Check treadmill operation per Section 3

Procedure 6.13 - Replacing the HR PCA

1. Set the treadmill circuit breaker in the “off” position and unplug the treadmill’s line cord from the AC outlet.

2. The PCA’s in the display are static sensitive. They can be damaged if proper static prevention equipment is not used. Attach an anti-static wrist strap to your arm, then connect the ground lead of the wrist strap to the treadmill’s frame ground.

3. Remove the eight screws that fasten the display back cover and remove the display back cover.

4. Disconnect the HR cable and handlebar cable from the HR PCA. See Diagram 6.9.

5. The HR PCA snaps into its mounting. Press its tabs downward and remove the HR PCA from its mounting.

6. Orient the replacement HR PCA so that the side with three connectors is facing to the left and snap the HR PCA into its mounting.

7. Connect the handlebar cable to the upper connector on the HR PCA and the HR cable to the lower connector on the HR PCA. See Diagram 6.9.

8. Replace the display back cover with the hardware removed in step 3.

9. Check treadmill operation per Section 3

Procedure 6.14 - Replacing the Display Face

1. Set the treadmill circuit breaker in the “off” position and unplug the treadmill’s line cord from the AC outlet.

2. The PCA’s in the display are static sensitive. They can be damaged if proper static prevention equipment is not used. Attach an anti-static wrist strap to your arm, then connect the ground lead of the wrist strap to the treadmill’s frame ground.

3. Remove the eight screws that fasten the display back cover and remove the display back cover.

4. Disconnect the data cable, 2 CSAFE cables and the heart rate cable from the upper PCA. See Diagram 6.9.

5. The display cap snaps onto the display with two tabs. Reach into the upper portion of the display and locate the two display cap tabs. Press the tabs outwards to disengage the tabs and remove the display cap.

6. The display face snaps onto the display with six tabs. One of the tabs is behind the HR PCA. The HR PCA snaps into its mounting. Press its tabs downward and remove the HR PCA from its mounting.

7. Press the four display face tabs outwards and disengage the display face from the display. Disconnect the stop switch cable from the upper PCA and remove the display face from the display.

8. Disconnect the Metrics cable, D-pad cable and the keypad cable from the upper PCA. See Diagram 5.1.

9. The upper PCA snaps into the display face. Press the upper PCA tabs outward and remove the upper PCA from the display face.

10. Disconnect the Metrics cable from the Metrics PCA. See Diagram 5.1.

11. The Metrics PCA snaps into the display face. Press the Metrics PCA tabs outward and remove the Metrics PCA from the display face.

12. Disconnect the D-pad cable from the D-pad assembly. See Diagram 5.1.

13. The D-pad assembly snaps into the display face. Release the D-pad assembly’s tabs and push the D-pad assembly out of the front of the display face.

14. Snap the upper PCA into its mounting on the replacement display face.

15. The red wire in the Metrics and D-pad cables indicate pin 1. Align the red wire in the Metrics and D-pad cables with the pin 1 markings on the upper PCA. Connect the Metrics, D-pad and keypad cables to the upper PCA.

16. Snap the Metrics PCA into its mounting on the replacement display face.

17. The red wire in the Metrics cable indicates pin 1. Align the red wire in the Metrics cable with the pin 1 markings on the Metrics PCA. Connect the Metrics cable to the Metrics PCA.

18. With the D-pad assembly oriented so that the incline and speed switches are correctly aligned, slide the D-pad assembly into the replacement display face until it snap into place.

19. The red wire in the D-pad cable indicates pin 1. Align the red wire in the D-pad cable with the pin 1 markings on the D-pad PCA. Connect the D-pad cable to the D-pad PCA.

20. Connect the stop switch cable to upper PCA and snap the display face into place on the display.

21. Reconnect the data cable, two CSAFE cables and the HR cable to the upper PCA as shown in Diagram 6.9.

22. Snap the HR PCA into its mounting. See Diagram 6.9.

23. Snap the display cap into place on the display.

24. Replace the display back cover with the hardware removed in step 3.

25. Check treadmill operation per Section 3

Procedure 6.15 - Drive Roller Replacement

Note: Two running belt gauges, Precor part number 20007-101, are required. It is important that this procedure be followed to maintain correct drive belt and running belt tension. Over tensioning the belt will lead to premature running belt wear, premature driver roller bearing failure and premature take up roller bearing failure.

Drive Roller Removal

1. Remove the end caps from the rear of treadmill to expose the take up roller mounting bolts. Remove the treadmill's motor cover.

2. Remove the deck trim from both sides.

3. Loosen, but do not remove the take up roller mounting bolts. The bolts are being loosened to remove tension from the running belt.

4. Slowly rotate the drive motor flywheel while pressing the drive belt off of the drive roller pulley.

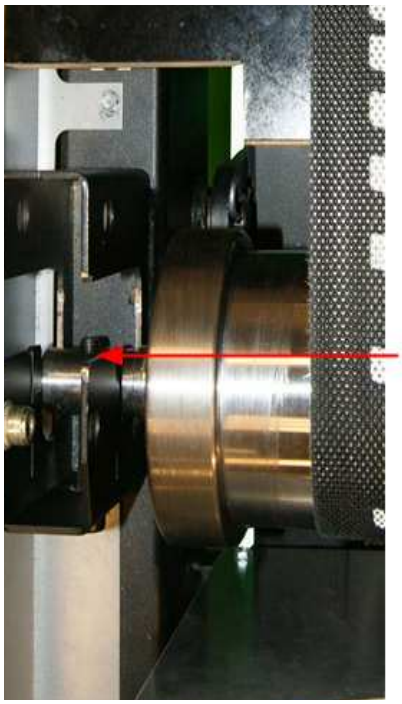

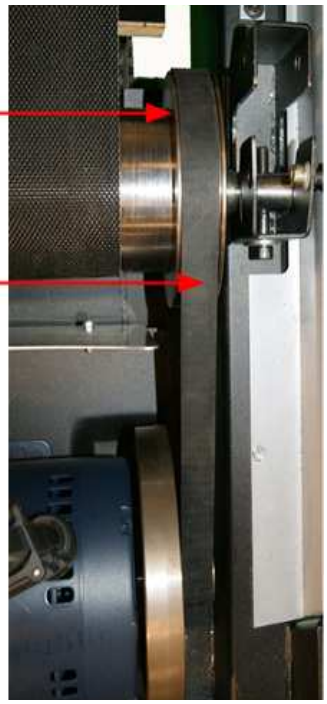

5. Remove both drive roller mounting bolts releasing the tension evenly on both sides. Remove the drive roller from the treadmill using the drive belt as a handle.

Installing the Drive Roller

6. Place the drive belt on the new drive roller and use as a handle to slide the drive roller through the running belt and into place. Hand tighten both drive roller mounting bolts.

7. Make sure the running belt is in the center of the deck, the spacing should be the same on each side of the running belt to the edge of the running deck.

8. Start tightening the left and right side drive roller mounting bolts. Move back and forth between the left and right side mounting bolts so the bolts will tension evenly which will reduce the stress on the threads of the bolts. The left side drive roller shaft will tighten flush to the front frame bracket. Using a measuring tape, measure the distance from the front of the left side drive roller shaft to the front of the frame cross beam and make note of that measurement. Tighten the right side drive roller bolt until it measures the same distance as the left side drive roller, shaft to frame. This will ensure that the drive roller is parallel and square to the front of the frame.

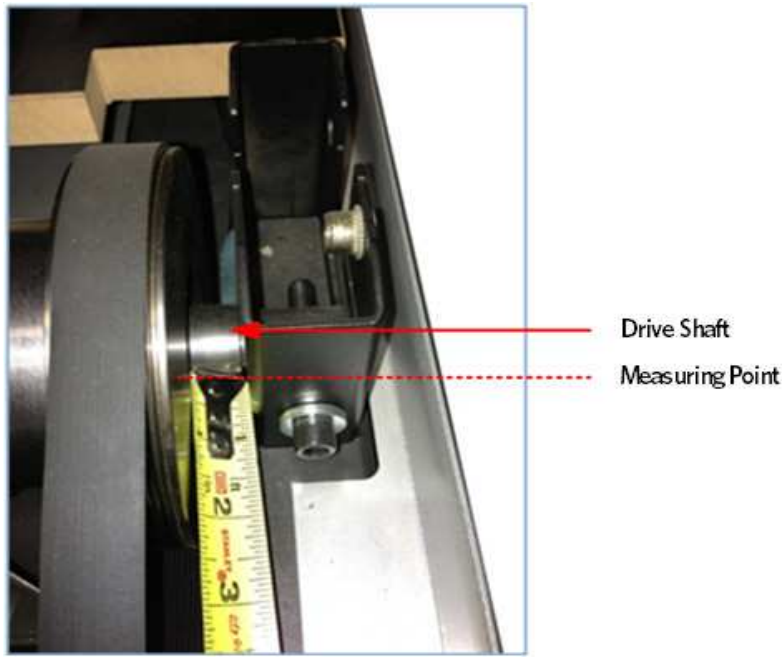

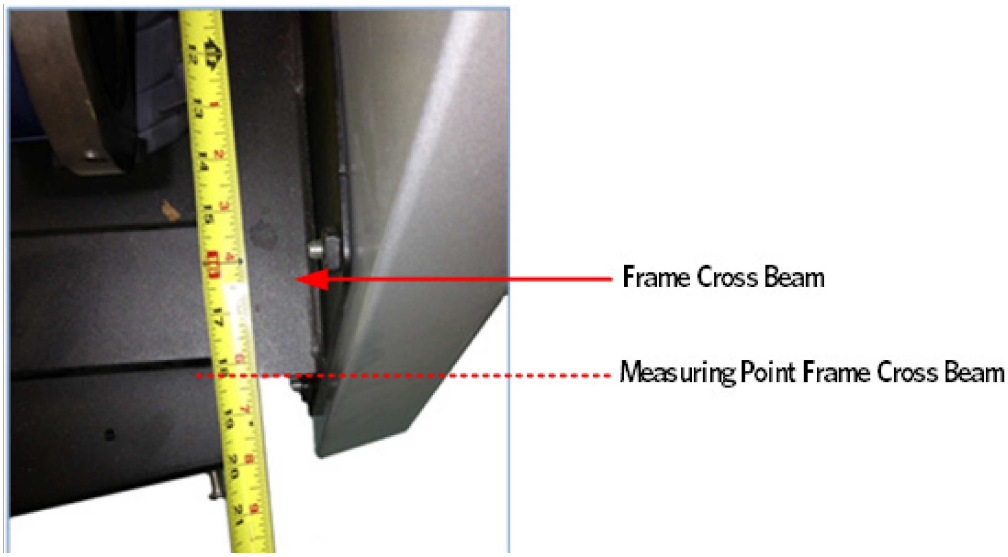

9. Walk the drive belt onto the drive roller pulley by rotating the drive motor flywheel. Be sure the belt is fully seated in the grooves of both pulleys and correctly aligned. A drive belt tension gauge should read 100-120 pounds. The drive belt de-tension after use. A range of 80-90 pounds after the belt has been installed for a while is acceptable.

Tensioning the Running Belt

10. Move the running belt so that the seam is underneath the treadmill. Place a running belt tension gauge on each side of the running belt parallel from each other. The gauges have a fixed side and a movable side. Place the movable side to the middle of its travel and adjust the dial pointer to the number 3.

11. Carefully move the running belt so that you can see the dials easily while tightening the take up roller mounting bolts. Tighten the take up roller mounting bolts alternately in order to evenly tighten the running belt. Tighten bolts until the gauges read .55%, which is five and 1/2 lines past the number 3.

12. Remove both gauges from the running belt.

Running Belt Tracking Adjustment

13. Place a reference point on the deck right next to one edge of the running belt so that any side to side movement can be observed, a white grease marker works well. Start the treadmill and set the speed to 1 mph. Observe the running belt, if the belt starts to drift toward the right, slowly turn the right side take up roller mounting bolt clockwise until the drifting stops. If the belt starts to drift toward the left, slowly turn the right side take up roller mounting bolt counterclockwise until the drifting stops. The adjustments should only be done in 1/4 turn increments. NOTE: ONLY use the right side take up roller mounting bolt to adjust tracking.

14. Increase the speed to 3 mph for a minute, then 6 mph, 9 mph and finally 12 mph, making any small adjustments as needed.

15. Set the treadmill speed to 3 mph and walk on the treadmill for a couple of minutes. Verify that the belt has not moved. Adjust the right side take up roller mounting bolt if needed to make final adjustments.

16. Replace the end caps or rear guard and motor cover.

Procedure 6.17 - Take Up Roller Replacement

Note: Two running belt gauges, Precor part number 20007-101, are required. It is important that this procedure be followed to maintain correct drive belt and running belt tension. Over tensioning the belt will lead to premature running belt wear, premature driver roller bearing failure and premature take up roller bearing failure.

1. Remove the end caps or rear guard from the rear of the treadmill to expose the take up roller mounting bolts. Remove the treadmill motor cover.

2. Remove the deck trim from both sides.

3. Walk the drive belt off the drive roller and motor pulleys.

4. Loosen, but do not remove the drive roller mounting bolts. Release the tension evenly on both sides. These bolts are being loosened to remove the tension on the running belt.

5. If applicable, remove the rear roller guards located in the front of the take up roller.

6. Remove the take up roller mounting bolts by releasing the tension evenly on both sides. Then lift and slide the take up roller out.

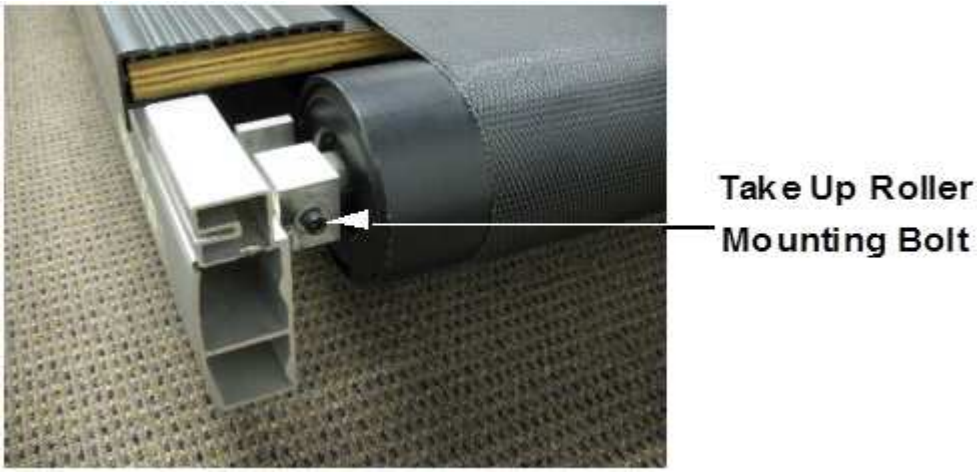

7. Slide the new take up roller through the running belt and into place. Hand tighten both take up roller mounting bolts a few turns only.

8. Make sure the running belt is in the center of the deck, the spacing should be the same on each side of the running belt to the edge of the running deck.

9. Start tightening the left and right side drive roller mounting bolts. Move back and forth between the left and right side mounting bolts so the bolts will tension evenly which will reduce the stress on the threads of the bolts. The left side drive roller shaft will tighten flush to the front frame

bracket. Using a measuring tape, measure the distance from the front of the left side drive roller shaft to the front of the frame cross beam and make note of that measurement. Tighten the right side drive roller bolt until it measures the same distance as the left side drive roller, shaft to frame. This will ensure that the drive roller is parallel and square to the front of the frame.

10. Walk the drive belt onto the drive roller pulley by rotating the drive motor flywheel. Be sure the belt is fully seated in the grooves of both pulleys and correctly aligned. A drive belt tension gauge should read 100-120 pounds. The drive belt de-tension after use. A range of 80-90 pounds after the belt has been installed for a while is acceptable.

11. Move the running belt so that the seam is underneath the treadmill. Place a running belt tension gauge on each side of the running belt parallel from each other. The gauges have a fixed side and a movable side. Place the movable side to the middle of its travel and adjust the dial pointer to the number 3.

NOTE: Using the number 3 as a reference point and centering the movable side of the gauge allows increment or decrement movement without impeding the travel of the gauge.

12. Carefully move the running belt so that you can see the dials easily while tightening the take up roller mounting bolts. Tighten the take up roller mounting bolts alternately in order to evenly tighten the running belt. Tighten bolts until the gauges read .55%, which is five and 1/2 lines past the number 3.

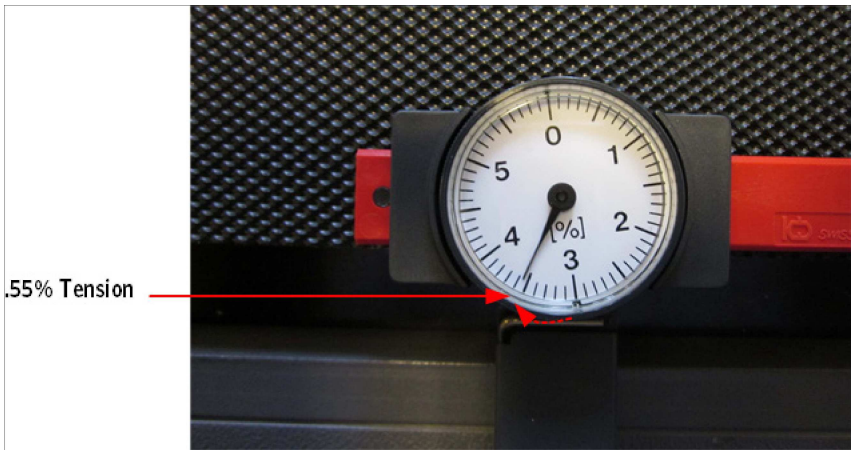

13. Remove both gauges from the running belt.

Running Belt Tracking Adjustment

14. Place a reference point on the deck right next to one edge of the running belt so that any side to side movement can be observed, a white grease marker works well. Start the treadmill and set the speed to 1 mph. Observe the running belt, if the belt starts to drift toward the right, slowly turn the right side take up roller mounting bolt clockwise until the drifting stops. If the belt starts to drift toward the left, slowly turn the right side take up roller mounting bolt counterclockwise until the drifting stops. The adjustments should only be done in 1/4 turn increments. NOTE: ONLY use the right side take up roller mounting bolt to adjust tracking.

15. Increase the speed to 3 mph for a minute, then 6 mph, 9 mph and finally 12 mph, making any small adjustments as needed.

16. Set the treadmill speed to 3 mph and walk on the treadmill for a couple of minutes. Verify that the belt has not moved. Adjust the right side take up roller mounting bolt if needed to make final adjustments.

17. Replace the end caps or rear guard and motor cover.

Procedure 6.17 - Running Belt and/or Deck Replacement

Note: Two running belt gauges, Precor part number 20007-101, are required. It is important that this procedure be followed to maintain correct drive belt and running belt tension. Over tensioning the belt will lead to premature running belt wear, premature driver roller bearing failure and premature take up roller bearing failure.

1. Remove the end caps from the rear of treadmill to expose the take up roller mounting bolts. Remove the treadmill's motor cover.

2. If applicable, remove the finger guard from in front of the take up roller.

3. Remove both running deck trim strips and both take up roller mounting bolts. Remove the take up roller from the treadmill.

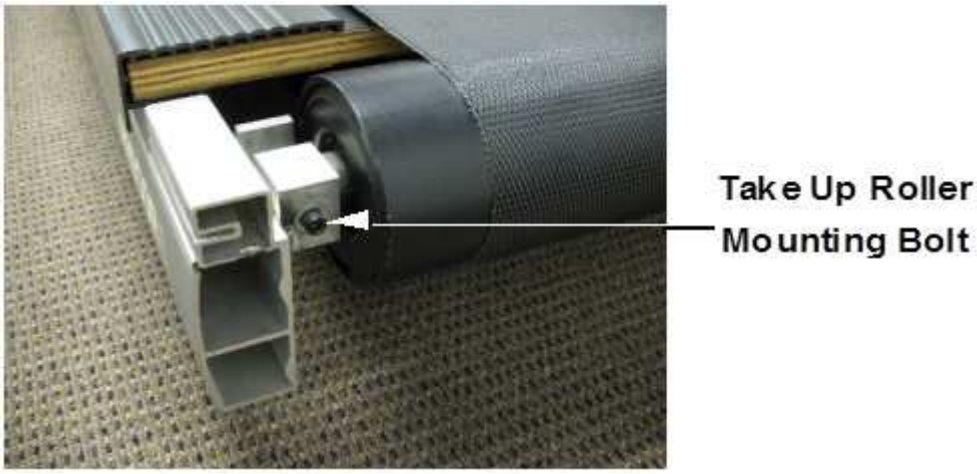

4. Slowly rotate the drive motor flywheel while pressing the drive belt off of the drive roller pulley. Continue until the drive belt walks completely off of the drive roller pulley.

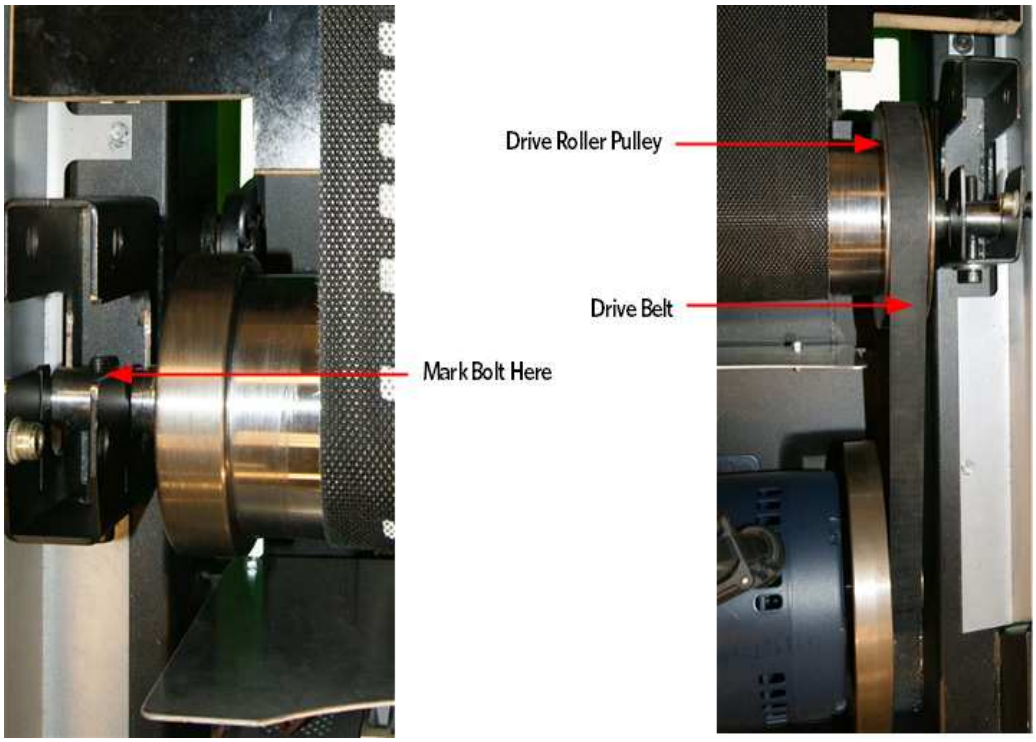

5. Remove the four bolts and the retaining plates that hold the deck to the frame. Lift the deck and running belt up and away from the treadmill.

6. Remove both drive roller mounting bolts releasing the tension evenly on both sides. Remove the drive roller from the treadmill using the drive belt as a handle.

7. Remove the Auto Stop magnet from the deck, if applicable. Slip the running belt off the deck and discard. Remove the inserts from the deck and flip it over. re-insert them into the new deck surface.

If the deck has already been flipped replace it with a new deck. Make sure that the new deck surface is clear of debris. Ensure the new deck is installed with the inserts on the bottom of the deck.

8. The new running belt will have an arrow pointing in one direction on the underside. The arrow indicates the correct direction of travel for the belt. Premature belt failure will occur if the belt is installed incorrectly. Slip the new running belt onto the deck and carefully place them back onto the treadmill.

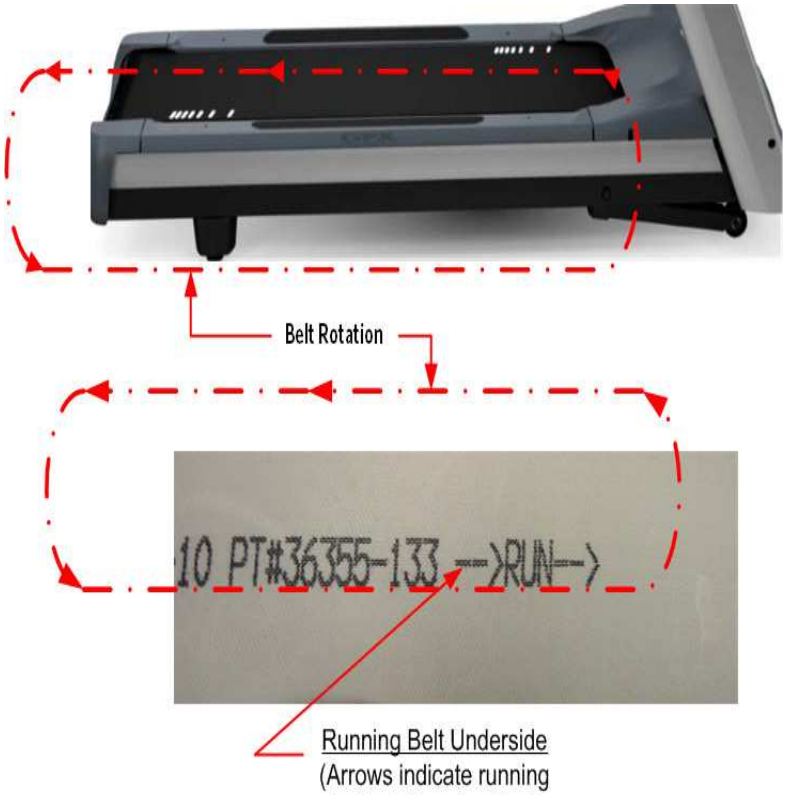

9. Reinstall the Auto Stop magnet on the right front corner of the deck, if applicable.

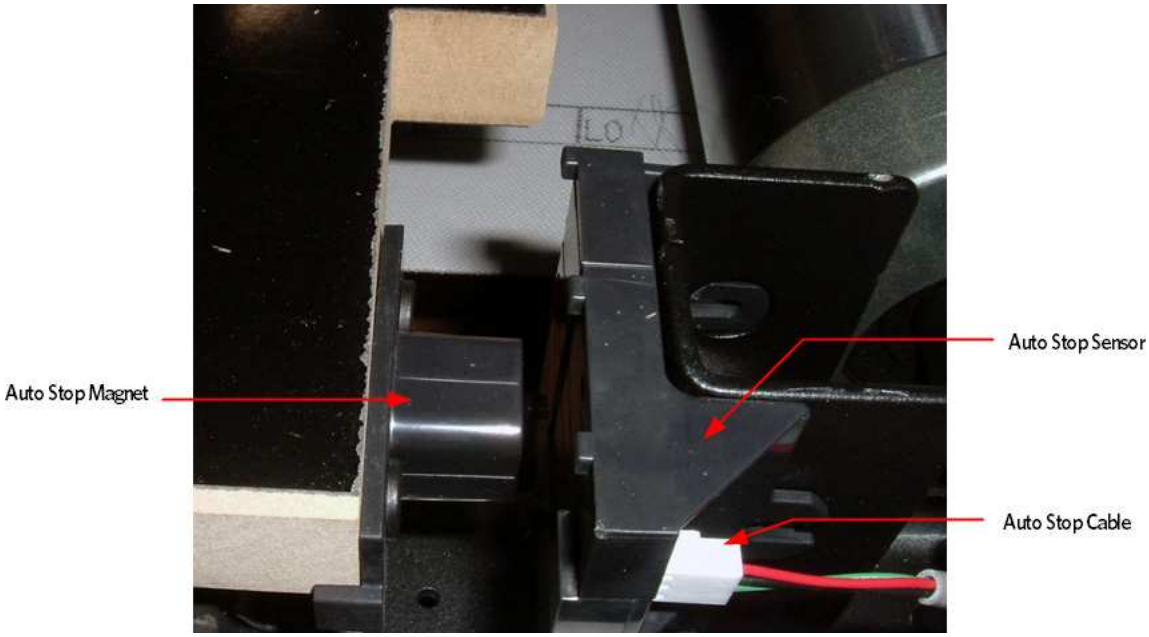

10. Slide the running deck back into position over the running deck pivot bracket. Align the bottom plate and pivot bracket holes with the running deck bolt holes. Replace the plates and the running deck mounting bolts removed in step 7. Only hand tighten the bolts at this time.

11. Hand tighten the bolts and washers back onto the deck securing it to the frame ensuring the bottom retaining plates are between the deck and the pivots. Verify the spacing on all four corners that they are the same..

12. Check the alignment of the magnet and the auto stop assembly. The magnet and the auto stop assembly each have an alignment mark on the top of their housings. The magnet mark and the auto stop mark should align and the gap should be approximately 3/16 of an inch between the housings. A 3/16 allen wrench can be used as a feeler gauge to set the correct gap. If the gap or alignment are off adjust the running deck until the magnet and auto housing are properly aligned.

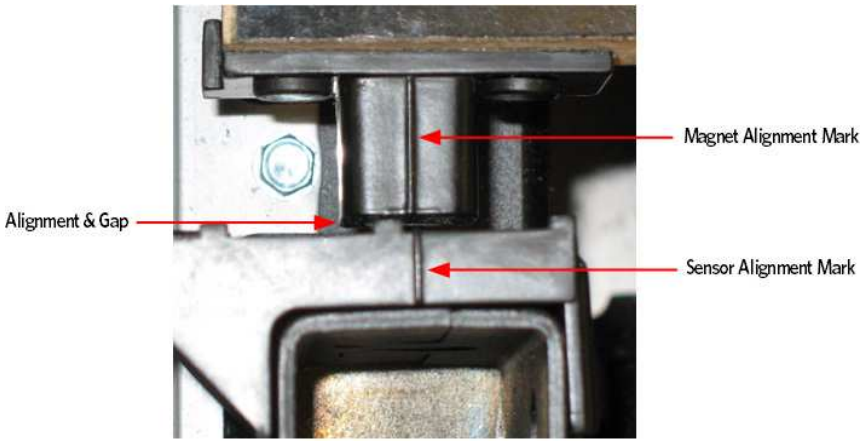

13. Tighten the bolts so the deck is secure. Torque the bolts to 150 inch pounds.

14. Make sure the running belt is in the center of the deck, the spacing should be the same on each side of the running belt to the edge of the running deck.

15. Start tightening the left and right side drive roller mounting bolts. Move back and forth between the left and right side mounting bolts so the bolts will tension evenly which will reduce the stress on the threads of the bolts. The left side drive roller shaft will tighten flush to the front frame bracket. Using a measuring tape, measure the distance from the front of the left side drive roller shaft to the front of the frame cross beam and make note of that measurement. Tighten the right side drive roller bolt until it measures the same distance as the left side drive roller, shaft to frame. This will ensure that the drive roller is parallel and square to the front of the frame.

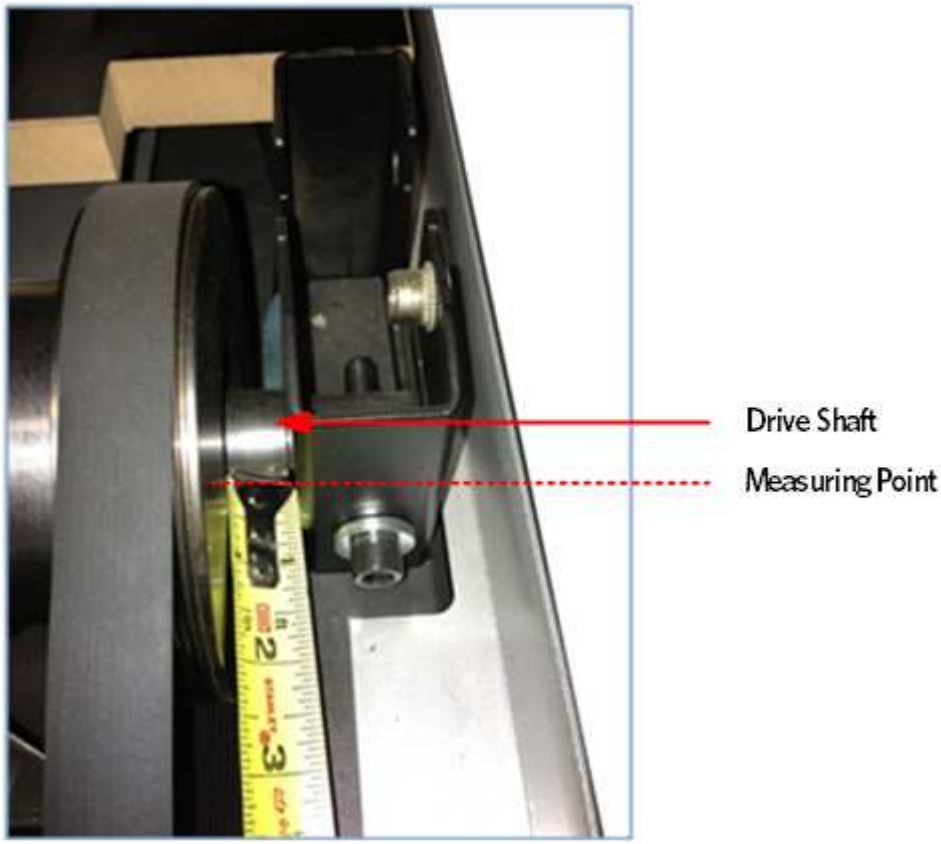

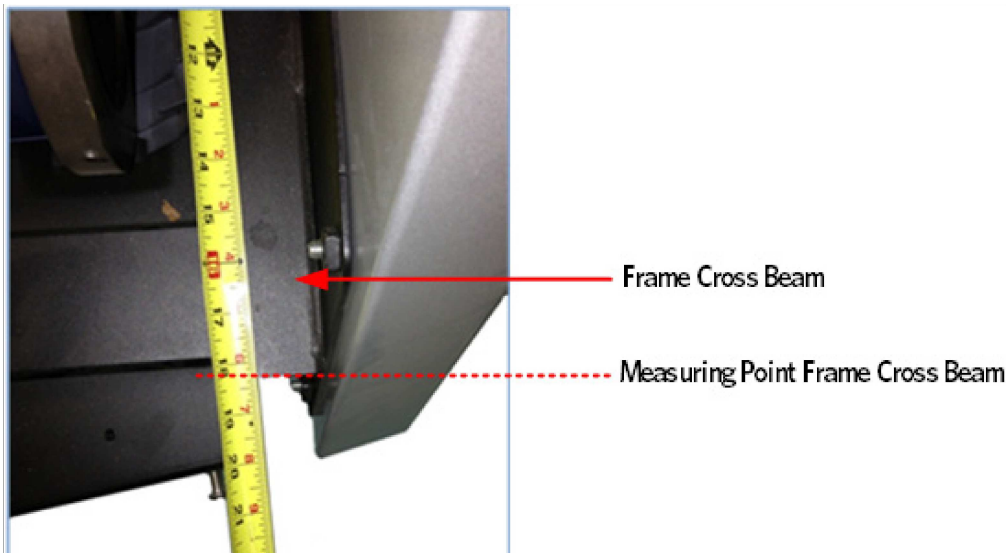

16. Walk the drive belt onto the drive roller pulley by rotating the drive motor flywheel. Be sure the belt is fully seated in the grooves of both pulleys and correctly aligned. A drive belt tension gauge should read 100-120 pounds. The drive belt de-tension after use. A range of 80-90 pounds after the belt has been installed for a while is acceptable.

17. Move the running belt so that the seam is underneath the treadmill. Place a running belt tension gauge on each side of the running belt parallel from each other. The gauges have a fixed side and a movable side. Place the movable side to the middle of its travel and adjust the dial pointer to the number 3.

NOTE: Using the number 3 as a reference point and centering the movable side of the gauge allows increment or decrement movement without impeding the travel of the gauge.

18. Carefully move the running belt so that you can see the dials easily while tightening the take up roller mounting bolts. Tighten the take up roller mounting bolts alternately in order to evenly tighten the running belt. Tighten bolts until the gauges read .55%, which is five and 1/2 lines past the number 3.

19. Remove both gauges from the running belt.

Running Belt Tracking Adjustment

20. Place a reference point on the deck right next to one edge of the running belt so that any side to side movement can be observed, a white grease marker works well. Start the treadmill and set the speed to 1 mph. Observe the running belt, if the belt starts to drift toward the right, slowly turn the right side take up roller mounting bolt clockwise until the drifting stops. If the belt starts to drift toward the left, slowly turn the right side take up roller mounting bolt counterclockwise until the

drifting stops. The adjustments should only be done in 1/4 turn increments. NOTE: ONLY use the right side take up roller mounting bolt to adjust tracking.

21. Increase the speed to 3 mph for a minute, then 6 mph, 9 mph and finally 12 mph, making any small adjustments as needed.

22. Set the treadmill speed to 3 mph and walk on the treadmill for a couple of minutes. Verify that the belt has not moved. Adjust the right side take up roller mounting bolt if needed to make final adjustments.

23. If applicable, replace the finger guard.

24. Replace both running deck trim strips and the end caps and motor cover.

Wiring Diagram 7.1 - C956i, C966i 120 Vac

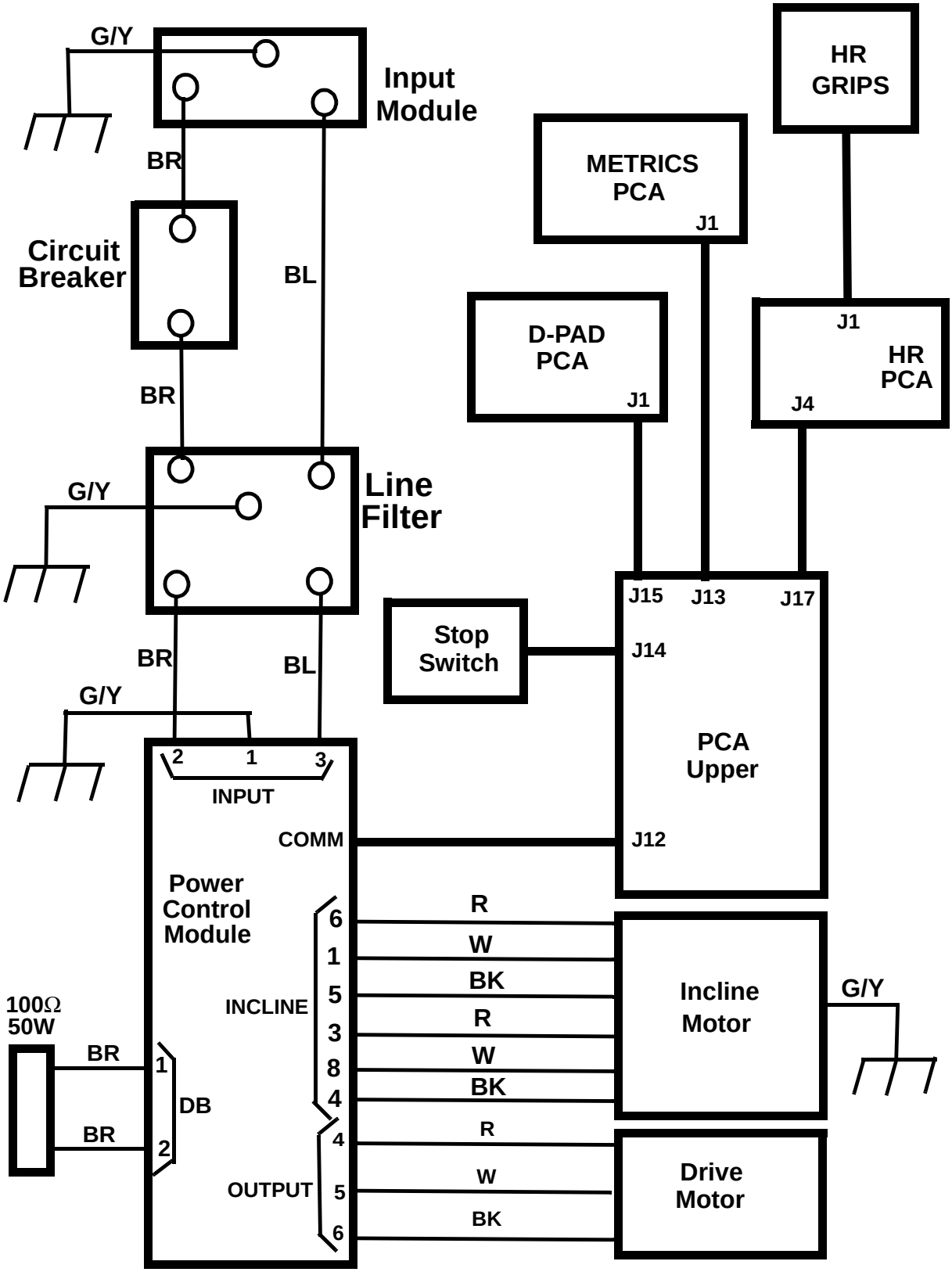

Block Diagram 7.2 - C956i, C966i 120 Vac

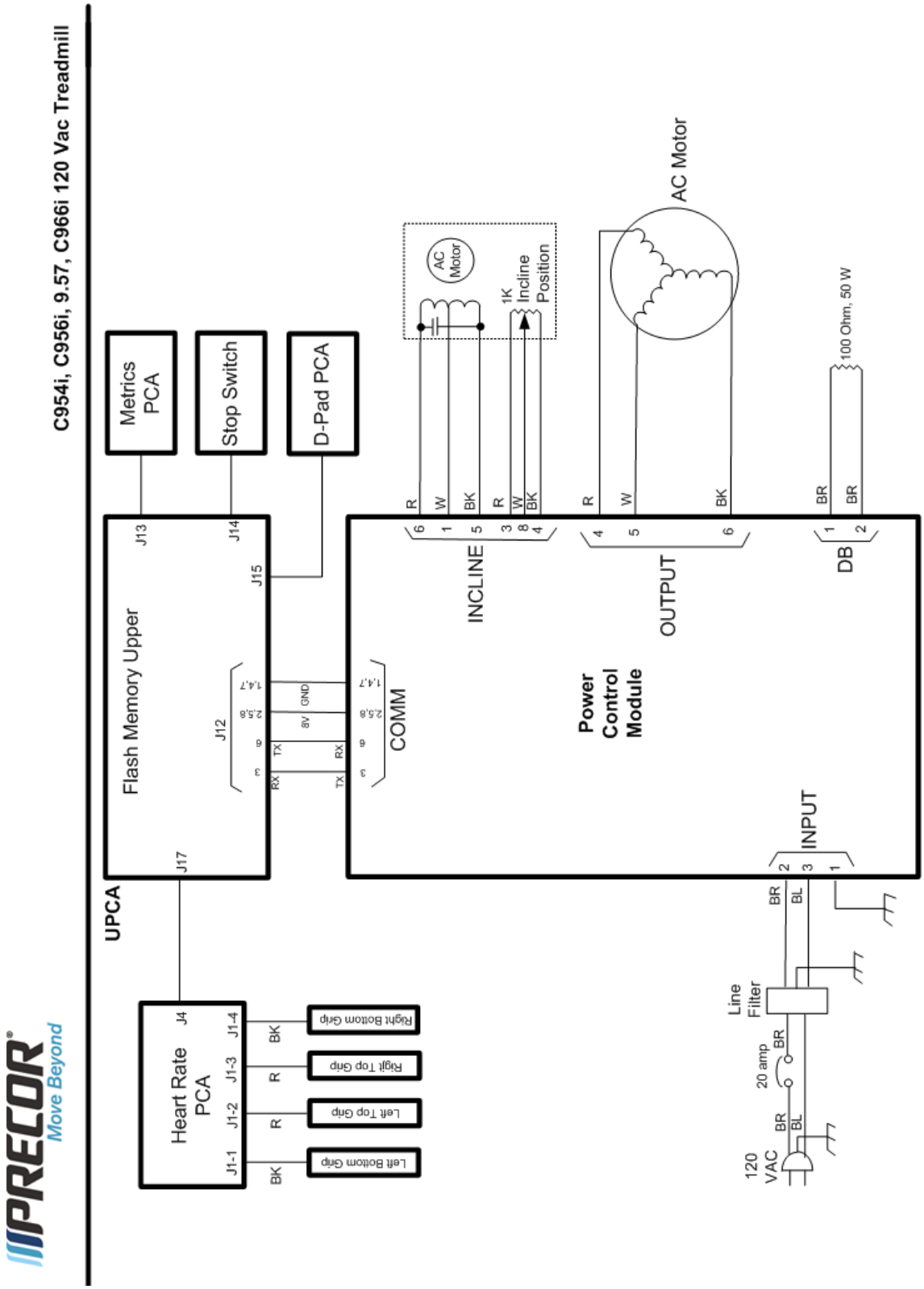

Wiring Diagram 7.3 - C956i, C966i 240 Vac

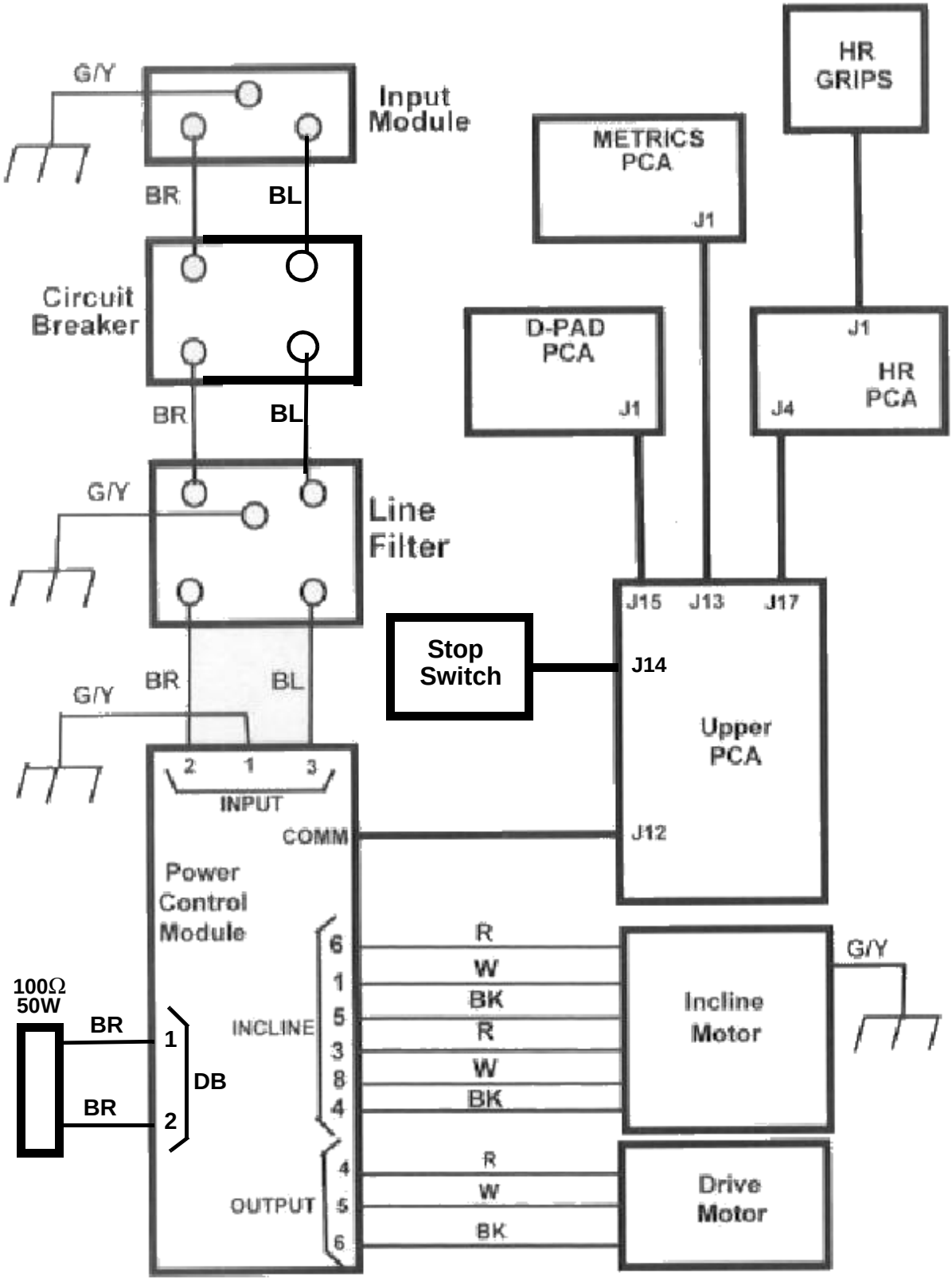
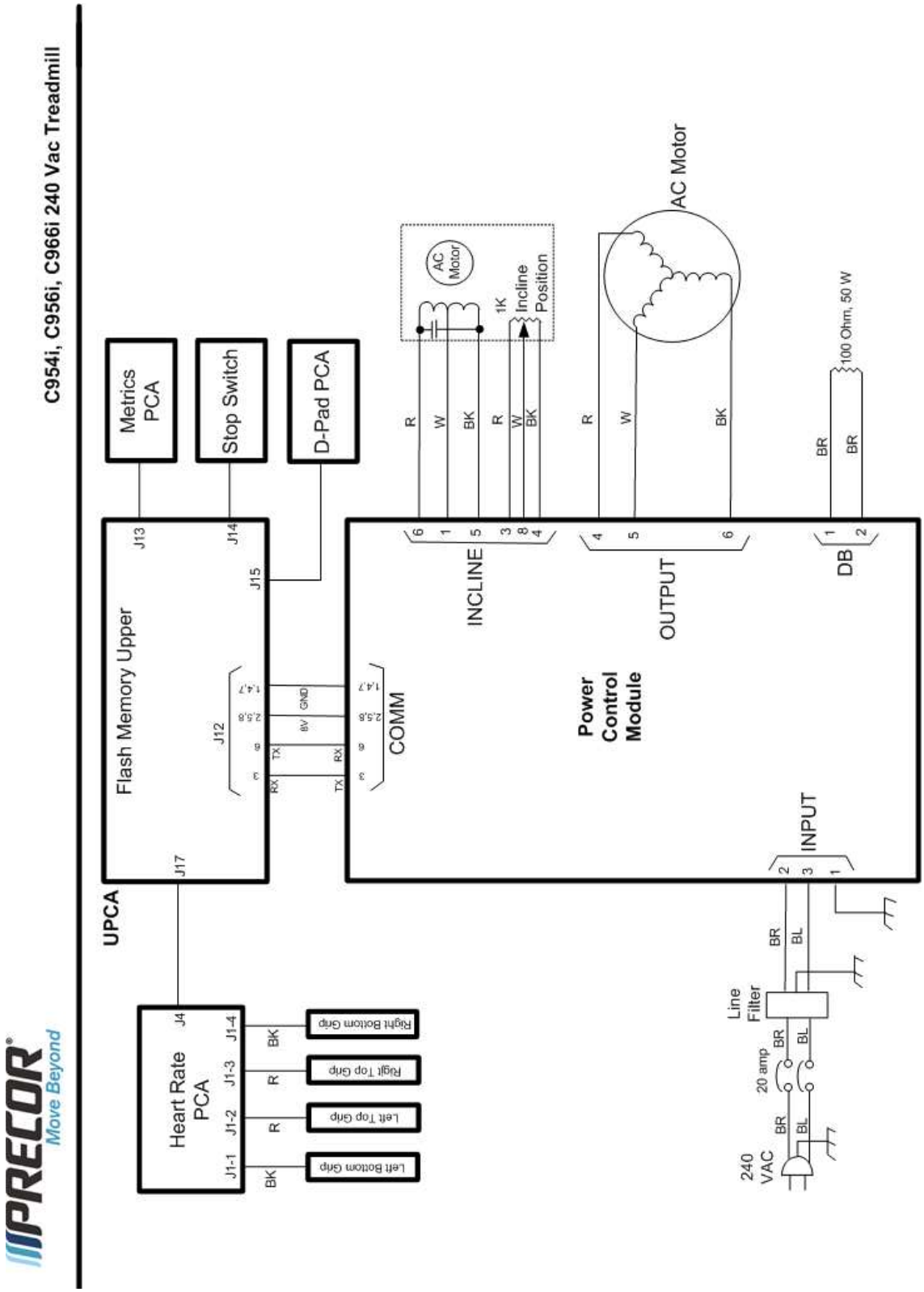
Block Diagram 7.4 - C956i, C966i 240 Vac